Randal Park Community Development District

Agenda

May 20, 2022

AGENDA

Randal Park
Community Development District

Meeting Agenda

Friday
May 20, 2022
9:30 AM

Randal House Clubhouse
8730 Randal Park Blvd.
Orlando, Florida

1. Roll Call
2. Public Comment Period (Speakers will fill out a card and submit it to the District Manager prior to the beginning of the meeting)
3. Approval of Minutes of the April 15, 2022 Meeting
4. Consideration of Resolution 2022-03 Approving the Proposed Budget for Fiscal Year 2023 and Setting Public Hearing
5. Engineer's Report
6. Consideration of Upright Bike Replacement
7. Staff Reports
    A. Attorney
    B. District Manager's Report
        i. Approval of Check Register
        ii. Balance Sheet and Income Statement
        iii. Presentation of Registered Voters: 1,448
        iv. Field Manager's Report
            1. Proposals for Shade Structure at Pool
            2. Proposals for Pergola and Cattle Fence Refinishing
        v. Amenity Report
8. Supervisor's Requests
9. Other Business
10. Next Meeting Date
11. Adjournment

SECTION III

MINUTES OF MEETING
RANDAL PARK
COMMUNITY DEVELOPMENT DISTRICT

The regular meeting of the Board of Supervisors of the Randal Park Community Development District was held Friday, **April 15, 2022** at 9:30 a.m. at the Randal House Clubhouse, 8730 Randal Park Boulevard, Orlando, Florida.

Present and constituting a quorum were:

Stephany Cornelius	Chairperson
Katie Steuck	Vice Chairperson by telephone
Chuck Bell	Assistant Secretary
David Grimm	Assistant Secretary by telephone
Matthew Phelps	Assistant Secretary

Also present were:

Tricia Adams	District Manager
Jan Carpenter	District Counsel
James Hoffman	District Engineer by telephone
Marshall Tindell	Field Manager
Logan Smith	Field Manager
Alexandra Panagos	Community Manager
Leslie Williams	Resident by telephone
Several Residents	

FIRST ORDER OF BUSINESS **Roll Call**

Ms. Adams called the meeting to order at 9:30 a.m. and called the roll.

SECOND ORDER OF BUSINESS **Public Comment Period**

Mr. Beaty asked what is the timeline for the fountain in the back by the wall? Is there an approved budget for the additional landscaping that was going to be put in back there? There are 50 pine trees spaced apart. To put two cabbage palms between them would cost $4,000 in material. The other issue is that both ends of the wall, they didn't extend the wall into the tree line that they said that they would. You can see the train go by on both sides of the wall. I don't know if there is an option to put in thicker landscaping. There may not be on the right side

because they put in a fence with a gate and I don't know if they require access. They have plastic slats that go into a chain link fence and maybe we could put those in. I assume they will put in a fence on the other side too to block the view of the train. I asked a few months ago about putting a dog water fountain and bench in the dog park in the back like the one in the front. The front one also has a paver area in front of the gate. There is not one in the back and there is a big hole from the dogs going in and out. Is there a way to get approval for the paver area, bench and maybe a dog water fountain?

Ms. Adams stated oftentimes questions regarding the status of various projects are answered during the board meeting. We have a field manager's report and other updates that are scheduled. Any questions that aren't answered in the course of the discussion we will circle back to under field manager's report.

Ms. Williams stated at the last meeting Mr. Hoffman was going to follow-up to see if Brightline has certified if the pond has been restored to its original space before we can proceed with the fountain project.

Mr. Hoffman stated I was not able to confirm that one way or another, they permit things a little differently with Brightline. I'm still trying to get that information and I will report back as soon as I can.

Ms. Cornelius stated the comment from Jenn Thomlison was about the dog park as well. There are quite a few of us using the dog park around 5 p.m. and I believe she is referencing the first dog park, there has been anywhere between 6 to 12 dogs there at a time. What is the status of the stone wall and the temporary fence. Is it possible to have the stones removed from the perimeter of the dog park grass? These stones are dangerous to the dogs if they are swallowed it could lead to a costly surgery to have them removed, they have personal experience with this. Kids that come to see the dogs often pick up these stones and throw them at the dogs in a playful way but the dogs try to eat them. If the wall is going to come down what are the chances of extending the park area slightly? Several of us have been taking our dogs to Storey Park dog park because it is so much larger and has dog agility items

I'm sure this will be discussed under the field manager's report.

THIRD ORDER OF BUSINESS **Approval of the Minutes of the March 18, 2022 Meeting**

On MOTION by Ms. Cornelius seconded by Mr. Phelps with all in favor the minutes of the March 18, 2022 meeting as presented.

FOURTH ORDER OF BUSINESS **Public Hearing to Consider Resolution 2022-02 Adopting Amended and Restated Rules of Procedure**

Ms. Adams stated we will now open the public hearing that has been properly noticed to adopt amended and restated rules of procedure. We are required to take public comment during the public hearing, all of the members of the audience have had an opportunity to comment regarding the amended and restated rules of procedure, also all phone callers have had an opportunity to comment. In an abundance of opportunity for the public is there anyone here who would like to comment regarding the amended and restated rules of procedure?

There being none, the public hearing was closed.

Ms. Adams stated included under separate cover is a copy of the amenity facility policies. My understanding is that the board has been discussing and considering these policies over the course of several months. There is a marked-up version that was distributed for your review. There have been no changes since the last time you reviewed and provided input. Once these policies are in final form they will be posted on the district's website and adopted and enforced here by the amenity management team.

Mr. Phelps moved to approved Resolution 2022-02 and Ms. Cornelius seconded the motion.

Ms. Fitzpatrick stated the only problem I have is with the common areas, like the park in the middle because I live across the street from there. There seems to always be a lot of garbage there and most of the plants there by the fountain and over by the park are dead. Nobody maintains them. The landscapers are never over there doing anything with them. I have seen hoses for the irrigation system cut and thrown there by the landscapers and just left. The rock walls over there are falling apart and I have seen children throwing them at each other. Kids sit over by the fountains and pull at the rocks. The fountain is constantly green and nasty. A lot of

the common areas are not well maintained. What is going to be done about it? What do you have planned for it? The landscapers seem to be a problem because they don't maintain it.

Mr. Phelps stated landscaping will be discussed under the field manager's report.

Ms. Carpenter stated I want to clarify that the rules of procedure are related to the amenity policies so it is clear what we are adopting.

Ms. Adams stated typically board members have the ability to amend the amenity policies from time to time without a rule hearing. Because your amenity policy rules include progressive discipline including suspension from the amenity facilities, it did require a public hearing.

On voice vote with all in favor Resolution 2022-02Adopting Amended and Restated Rules of Procedure was approved.

FIFTH ORDER OF BUSINESS Engineer's Report

Mr. Hoffman stated since I spoke regarding Leslie's comments a few minutes ago, I sent an email to the project manager for Brightline and their consulting engineer, copied district counsel, district staff asking about the completion status of that work. It appears to be substantially complete, but we are not sure if they have any additional items to complete or when they intend to certify that complete with South Florida Water Management District.

Last month there was discussion about the access to the cell tower adjacent to 8651 Andreas Avenue. Chuck Bell provided some information to district staff this week and some suggestions. I went out there last month after our meeting and my observation of what is happening is: (1) the soils appear to be substantially native soils to Randal Park or a kind of pebbly stabilized swale with a high moisture content and it stays kind of soggy and (2) it appeared to be a decent job of compacting everything but there was still a fairly steep slope in terms of something for a heavy truck to drive across. It is pretty mild but it appeared if the trucks drive they kind of slide down the hill perpendicular to the driveway and that is probably the main cause of the rutting, not so much the soil giving way but the fact that they are kind of sliding. At the last meeting we said there are a number of options that could be used in terms of a stabilized grass pavement. I think the two biggest things to consider would be if we were to regrade that area to make sure we have a good free draining sand probably imported material, something stabilized enough where the trucks can get through but more of a free draining type

situation and it has to be coupled with a geogrid type stabilization holding it together. Most importantly make sure that access drive is as flat as feasible. You want a little bit of slope to get water off but right now I think there is too much slope and the trucks are sliding down the hill as they come in. With that option I think it is still viable to have a grass stabilized surface rather than go into a gravel driveway, which district members have expressed concern about encouraging access.

SEVENTH ORDER OF BUSINESS Discussion of Cell Tower Access

This item was taken out of order.

Ms. Adams stated as of right now the board members have not received any plans in terms of beefing up the cellphone tower access nor further information as to what that would look like. Are you proposing to bring something to the next meeting for the board members to consider in terms of improvements to the access road?

Ms. Carpenter stated we had written a letter to Mattamy telling them about the problem, Mattamy contacted Jason and talked over alternatives, meaning gravel, sod. If Mattamy is willing to do it since they have to indemnify us for Mattamy to get with Jimmy and come back with a plan. I think that makes sense and it sounds like your two alternatives match Jimmy's alternatives. Come back next month with a plan you want the board to okay.

Mr. Phelps asked if you bring this back in May, how soon can it be implemented?

Mr. Bell stated within 30-days of board approval would be reasonable.

Mr. Hoffman stated if staff would like us to not wait until the next meeting we can generate something and send it to the chairman to review.

Ms. Cornelius stated I think that is a good idea.

Ms. Adams asked is there a preference that the board delegates authority to the chair to approve the scope and authorize Mattamy to begin the work on the access road?

Ms. Cornelius responded yes.

> On MOTION by Ms. Cornelius seconded by Mr. Phelps with four in favor and none opposed the chair was delegated the authority to review and approve the scope of work for the cell tower access road improvement.

Mr. Hoffman stated just to clarify for the record, based on the aerial the existing path is well outside lot 132 at 8651 Andreas Avenue so everything we anticipate will be on CDD property. As we notify the chairman and everything is approved I think it would be appropriate for staff to notify the resident that this is happening out there. I'm not aware of any irrigation that happens to be out in the CDD tract but just a courtesy notice.

Mr. Phelps asked who would to be the one to notify them?

Ms. Adams stated the district manager can take that on. If we don't have the ability to contact them through electronic mail or telephone we can send a letter.

Jimmy, do you have anything further to report?

Mr. Hoffman stated no just an update on the needs analysis, we have been digging into that. The proposal was approved by the board at the last meeting and we still owe the board the proposal for signature and we will get that over to staff today for the chairman's signature. Hopefully, we will have a final draft of the report at the next meeting for the board to review.

SIXTH ORDER OF BUSINESS Discussion of Yoga Classes

Ms. Adams stated included in your agenda package is a query from a resident who happens to be qualified to teach yoga classes. I understand that this district has a history of approving lifestyle opportunities for residents in the form of various lessons. Typically, there would be an agreement with the instructor that has liability and other protections for the district.

Ms. Carpenter stated the concern that we have is the other classes were all outdoors and we have a rule in place for how that would happen and the cost. This one is for the clubhouse and the clubhouse already has a rate set so we would have to either determine a new rate or come up with a waiver and probably a hearing on okaying a new rate if we are going to be using the clubhouse for something other than resident functions.

The board discussed the fee to be charged for use of the room, conflicts with other rentals, fee to be collected from the instructor for use of the space, cost to set up and cleanup of the space.

Ms. Adams stated I will follow-up with district counsel outside the meeting to discuss the form of the agreement to move that forward. We don't have anything presented for board action and we will bring this back.

EIGHTH ORDER OF BUSINESS Discussion of Memorial of Charlie Keller

The board discussed the possibility of having some type of memorial on district owned property, the typos of memorial projects undertaken in other communities, initial cost, ongoing maintenance and concluded that it would be best left to a resident initiative to provide a proposal at a future meeting, rather than it being a district project.

NINTH ORDER OF BUSINESS Staff Reports

A. Attorney

Ms. Carpenter stated we have not gotten a response on whether they have given the official sign-off on the agreement yet. We are still waiting to hear back from them. They don't move quickly but we think it is in final form and there should be no more issues.

I heard a couple comments about Facebook and as a caution, social media is really difficult as a government because Facebook has responses and they cannot be kept as public records. Facebook, Instagram, tweets should not be used because we don't have any system to record the public business and comments, please refrain from doing that so you don't inadvertently have a public record or sunshine law issue expressing your view on something.

B. Manager

i. Approval of Check Registers

On MOTION by Ms. Cornelius seconded by Mr. Phelps with all in favor the check register was approved.

ii. Balance Sheet and Income Statement

A copy of the balance sheet and income statement were included in the agenda package.

iii. Field Manager's Report

Mr. Tindell gave an overview of the progress made on the soccer field and the leftover funds were used for the splash pad parts and stated the mile markers will be installed Monday.

I will touch base on a couple of public comments before I present the proposals. We will get with the landscaper and see what the options are for pricing of the Cabbage Palms.

Ms. Carpenter stated I think we decided not to do that. We went back to what they were going to install.

Mr. Phelps stated CSX agreed to the slash pines and our decision was to wait for the project to finish so we know what it looks like and then we as a board would vote on approving funds to allocate to augment what is in place. Slash pines is not a lot and it is not going to fill it in we also know we can't irrigate it so we have to be reasonable of what we put there. It hinges on when it is done before we do anything. The fountain and plants are waiting on completion then we vote on augmenting dollars.

Mr. Tindell stated the dog park fence extension for the top is in powder coating now and is on schedule for next week as well. As far as the stone aspect, I consider that to be a landscaping aspect unless the board wants to move to change the existing landscape and wall.

Ms. Cornelius stated I think the stones were put there to help with drainage.

Mr. Tindell stated we will go there after the meeting and see if we see anything that is a safety concern. The other concern she had was that the fence had some deteriorating element that some of the stones are popping off. We will do what we can to keep patching the wall unless the board wants to consider options to replace it but we are adding the fence on top so I believe we are sticking with the existing.

We will have to see if we can get water to the dog park and see if there is something we can tie into for the dog water fountain.

Mr. Bell stated I suggest working with Jimmy on that.

Ms. Adams stated expansion of the dog park is not budgeted at this time and if you want to consider that it would be a future capital project.

Ms. Cornelius stated maybe we can add to the budget in the future.

Mr. Tindell stated there was an issue with the plants by the fountain. My understanding is if the plants are wilting it may be due to the soil and is the reason by plants by the clubhouse also suffer. We will check with Latham to see if there is some oversight on the fountain area and see if there is a reason they are not addressing it. We have a proposal for the clubhouse area to replace some of the plants around here with saw palmettos and those will hold up better. The soil is more conducive to them.

Ms. Cornelius stated that is why we replaced plantings with sod because the soil is terrible. We didn't want to sod everything so they left some plants, but they aren't surviving either.

Ms. Fitzpatrick stated I disagree that it is the soil. It is the lack of caring for the plant, they plant them then don't turn the water on and they die. When I complained to the office or HOA they tell me about the water schedule so you are planting plants in the community and they only turn the water on two days a week and that is not enough water.

Ms. Cornelius stated can we give everything she said to Latham?

Mr. Tindell responded yes. I would like to investigate further to see where the issue is with that. The two day restriction is the city's restrictions, it isn't a budget issue so much as it is a city restriction.

Mr. Bell stated the city and South Florida Water Management District.

1. Proposals for Landscape Maintenance and Improvements

Mr. Tindell stated we have landscaping proposals from Yellowstone. Of those the most important is the Sylvester Palm treatment for $2,349.38. As a non-native plant the Sylvester Palms are prone to fungus and other issues and the injection helps preserve them and keep them healthy.

Mr. Smith stated these are the Sylvester Palms at the entrance from Dowden Road all the way down Randal Park Boulevard to the park area.

Mr. Tindell stated as you heard during public comments there are plants on the outside of the clubhouse that are not doing so well. This proposal is to replace those with saw palmettos, which will have a better chance of survival because the current plants do not do well in the soil. That amount is $2,308.00.

The next proposal is to remove the jasmine out front of the clubhouse and sod up to the building. Same issue, just a different plant and that amount is $789.53.

The board recessed the meeting, reconnected the supervisors on the telephone then reconvened the meeting.

Mr. Grimm stated I have been on this board for just over a year and I'm aware there are always contentious discussions from residents involving our landscape company and prior companies. This is probably the largest contract the board approves annually. I'm aware we have new projects we take on and those are new items and understand the need for cost when it comes to those. I don't understand why we continuously have projects that seem to be items that should be in the contract. I need clarity on why we have extra costs associated with what should be part of the contract.

Mr. Tindell stated as far as the injections, normally it is a separate line item in most of the communities it is not unusual. The standard proposals are for basic maintenance, trimming, detailing and standard spray but doesn't include specialized services on non-native plants necessarily.

Ms. Carpenter stated next time you go out to bid you can build those things in the contract but some districts don't do it every year, they may decide to do this bi-annually or every year or do it more often if there is a rash of some kind of disease that the palms are getting in the area. It is not unusual to see it as a separate line item.

Mr. Grimm stated we are unable to hear what is being said.

Ms. Adams stated we do require all board members in attendance to register a vote for all items that come before the board. For the record the two board members who are attending by phone have left the meeting, Supervisor Steuck and Supervisor Grimm.

Ms. Cornelius connected both supervisors on the phone.

Ms. Adams stated there is a scope of services in your agreement that the board agreed to along with your service provider. Your contracted amount for the annual service is $288,000 so it is a big contract, there is a scope that is specified in there. As projects come up outside the scope Yellowstone will provide these proposals from time to time for board consideration.

Mr. Grimm stated I can't imagine that palm treatment is not part of the contract.

Ms. Adams stated palm treatment is not always required and from time to time there can be a palm disease the palms may not be thriving and require something else. This treatment is considered extra treatment it is not part of the annual contract. This is standard district to district that the scope of services is specific to what is required and extra service is not part of the landscape maintenance agreement.

Mr. Phelps asked do we know when we go through that process again?

Ms. Adams stated I will get that information to you perhaps during this meeting.

Ms. Cornelius stated the comments have come up often enough and Marshall can look into what is happening.

> On MOTION by Ms. Cornelius seconded by Mr. Phelps with four in favor and Mr. Grimm opposed the three proposals from Yellowstone were approved.

Proposals for Lighting Replacement and Improvement Options

This item was taken out of order.

Mr. Tindell stated Logan has reached out to get proposals to address lighting around the clubhouse area. We have three proposals, one from Dauer, one from LD Lighting and one from Illuminations.

Mr. Smith stated the lighting around the clubhouse I mentioned in a previous meeting and the board directed me to pursue it. Illuminations and LD Lighting are the two that have quoted replacing the transformer as well as the existing and broken lighting. Illuminations provided for well lighting around the palms between the clubhouse and the pool, which would be highly effective and cut out the factor of lights breaking, people kicking them, tripping over them. I recommend Illuminations.

> On MOTION by Ms. Cornelius seconded by Mr. Phelps with all in favor the proposal from Illuminations USA in the amount of $7,374.96 was approved.

2. Proposals for Shade Structure Option and Removal of Existing

Mr. Tindell stated next is the shade option and removal of the existing pergola by the splash pad. We have a proposal from M.B.S. to do that in the amount of $3,200. They did a good job at the other location and seem to be one of the cheaper options around. It might be a good idea to get the pergolas removed so we can pursue the shade separately. The pergolas are aesthetically pleasing but do not necessarily provide shade we wanted to pursue a shade option. Pro Playgrounds is the only one who has given us a proposal, but we don't expect the numbers to change dramatically. They came in just over $100,000 and that is for all three pergolas.

Mr. Smith stated it is not for pergolas it is for shade structures. The two on the splash pad it have to be custom fit and I recommend the custom option to keep it similar to what it is now.

Mr. Phelps asked can we do a shade structure by the pool as step one and revisit what we do. The residents want shade by the pool. Let's get that first before we do it all.

Mr. Tindell stated we were pushing as hard as we could for Memorial Day. Does the board want to do a not to exceed number on that see if we can get the one by the pool? We could try to get MBS to take down the pergolas at the same time, get both items going and see if it is practical to get it done by that date and if not we may hold off and revisit this at the next board meeting. If we can get it done and it is within the not to exceed number we can try to move forward.

Ms. Adams stated the not to exceed is going to be difficult to determine. I don't know if these are standalone numbers, there may be economies of scale with the overall proposal.

Mr. Bell stated it is three weeks for permitting and more than likely you will get a comment so now you are six weeks.

Mr. Tindell stated instead of trying to rush this next time we will see if we can get a split proposal, we have the existing with the three.

Ms. Adams stated you could potentially split the cost over multiple fiscal years since this is a big ticket item.

Mr. Bell asked where is this being funded from?

Ms. Adams stated I looked at the capital reserves which would be the appropriate funding source. You have in excess of $350,000 in the capital reserve budget. That is something you will want to keep an eye on. I understand shade is a priority. There may be some interim things the board might want to consider in terms of additional pool umbrellas to get through the start of the summer season and give yourselves the time you need to competitively bid the shade structures and look an incremental approach.

Ms. Cornelius stated let's get the demo done.

Ms. Steuck left the meeting during this discussion.

On MOTION by Mr. Phelps seconded by Ms. Cornelius with four in favor the MBS proposal for demo of the pergolas in the amount of $3,200 was approved.

iv. Amenity Report

A copy of the amenity center report was included in the agenda package.

v. Discussion of Qualifying Period and Procedure

Ms. Adams stated your qualifying period with the supervisor of elections office for Orange County is from noon June 13, 2022 through noon June 17, 2022. Seat no. 5, seat no. 2 and seat no. 4 will be part of the general election process in November.

TENTH ORDER OF BUSINESS Supervisor's Requests

There being none, the next item followed.

ELEVENTH ORDER OF BUSINESS Other Business

There being none, the next item followed.

TWELFTH ORDER OF BUSINESS Next Meeting Date

On MOTION by Ms. Cornelius seconded by Mr. Phelps with all in favor the meeting adjourned at 11:25 a.m.

_____ _____

Secretary/Assistant Secretary Chairman/Vice Chairman

SECTION IV

RESOLUTION 2022-03

A RESOLUTION OF THE BOARD OF SUPERVISORS OF THE RANDAL PARK COMMUNITY DEVELOPMENT DISTRICT APPROVING A PROPOSED BUDGET FOR FISCAL YEAR 2022/2023 AND SETTING A PUBLIC HEARING THEREON PURSUANT TO FLORIDA LAW; ADDRESSING TRANSMITTAL, POSTING AND PUBLICATION REQUIREMENTS; ADDRESSING SEVERABILITY; AND PROVIDING AN EFFECTIVE DATE.

WHEREAS, the District Manager has heretofore prepared and submitted to the Board of Supervisors ("**Board**") of the Randal Park Community Development District (**"District"**) prior to June 15, 2022, a proposed budget (**"Proposed Budget"**) for the fiscal year beginning October 1, 2022 and ending September 30, 2023 (**"Fiscal Year 2022/2023"**); and

WHEREAS, the Board has considered the Proposed Budget and desires to set the required public hearing thereon.

NOW, THEREFORE, BE IT RESOLVED BY THE BOARD OF SUPERVISORS OF THE RANDAL PARK COMMUNITY DEVELOPMENT DISTRICT:

1. **PROPOSED BUDGET APPROVED.** The Proposed Budget prepared by the District Manager for Fiscal Year 2022/2023 attached hereto as **Exhibit A** is hereby approved as the basis for conducting a public hearing to adopt said Proposed Budget.

2. **SETTING A PUBLIC HEARING.** A public hearing on said approved Proposed Budget is hereby declared and set for the following date, hour and location:

DATE:	August 19, 2022
HOUR:	9:30 a.m.
LOCATION:	Randal House Clubhouse 8730 Randal Park Blvd. Orlando, FL 32832

3. **TRANSMITTAL OF PROPOSED BUDGET TO LOCAL GENERAL PURPOSE GOVERNMENT.** The District Manager is hereby directed to submit a copy of the Proposed Budget to Orange County and City of Orlando at least 60 days prior to the hearing set above.

4. **POSTING OF PROPOSED BUDGET.** In accordance with Section 189.016, *Florida Statutes*, the District's Secretary is further directed to post the approved Proposed Budget on the District's website at least two days before the budget hearing date as set forth in Section 2, and shall remain on the website for at least 45 days.

5. **PUBLICATION OF NOTICE.** Notice of this public hearing shall be published in the manner prescribed in Florida law.

6. **SEVERABILITY.** The invalidity or unenforceability of any one or more provisions of this Resolution shall not affect the validity or enforceability of the remaining portions of this Resolution, or any part thereof.

7. **EFFECTIVE DATE.** This Resolution shall take effect immediately upon adoption.

PASSED AND ADOPTED THIS 20th DAY OF MAY, 2022.

ATTEST:

RANDAL PARK COMMUNITY DEVELOPMENT DISTRICT

_____
Secretary

By:_____
Its:_____

Randal Park

Community Development District

Proposed Budget

FY 2023

Randal Park
Community Development District

Table of Contents

Randal Park

Community Development District

General Fund

Description	Adopted FY2022 Budget	Actual Thru 4/30/22	Projected Next 5 Months	Total as of 9/30/22	Proposed FY2023 Budget
Revenues					
Special Assessments	$ 963,338	$ 953,080	$ 10,259	$ 963,339	$ 963,338
Colonial Properties Contribution	$ 46,332	$ 27,715	$ 19,797	$ 47,512	$ 47,088
Miscellaneous Revenue	$ 1,000	$ 670	$ 375	$ 1,045	$ 1,000
Activities	$ 7,000	$ 1,556	$ 500	$ 2,056	$ 7,000
Rentals	$ 7,000	$ 11,250	$ 2,500	$ 13,750	$ 7,000
Carry Forward Surplus	$ -	$ -	$ -	$ -	$ -
Total Revenues	**$ 1,024,670**	**$ 994,271**	**$ 33,431**	**$ 1,027,702**	**$ 1,025,427**
Expenditures					
Administrative					
Supervisor Fees	$ 12,000	$ 5,000	$ 5,000	$ 10,000	$ 12,000
FICA Expense	$ 900	$ 383	$ 375	$ 758	$ 900
Annual Audit	$ 4,400	$ 4,400	$ -	$ 4,400	$ 4,500
Trustee Fees	$ 12,500	$ 8,500	$ 3,500	$ 12,000	$ 12,500
Dissemination Agent	$ 10,500	$ 6,125	$ 4,375	$ 10,500	$ 10,500
Arbitrage	$ 1,800	$ -	$ 1,200	$ 1,200	$ 1,800
Engineering	$ 10,000	$ 190	$ 4,167	$ 4,357	$ 10,000
Attorney	$ 20,000	$ 7,409	$ 8,750	$ 16,159	$ 20,000
Assessment Administration	$ 5,000	$ 5,000	$ -	$ 5,000	$ 5,000
Management Fees	$ 41,792	$ 24,379	$ 17,413	$ 41,792	$ 43,882
Information Technology	$ 1,400	$ 817	$ 583	$ 1,400	$ 1,800
Website Maintenance	$ 1,200	$ 700	$ 500	$ 1,200	$ 1,200
Telephone	$ 100	$ -	$ 42	$ 42	$ 100
Postage	$ 650	$ 252	$ 271	$ 523	$ 650
Insurance	$ 5,834	$ 5,490	$ -	$ 5,490	$ 7,440
Printing & Binding	$ 2,150	$ 353	$ 896	$ 1,248	$ 2,150
Legal Advertising	$ 2,250	$ 646	$ 1,604	$ 2,250	$ 2,250
Other Current Charges	$ 1,700	$ 347	$ 875	$ 1,222	$ 1,700
Office Supplies	$ 200	$ 224	$ 20	$ 244	$ 200
Property Appraiser	$ 800	$ -	$ -	$ -	$ 800
Property Taxes	$ 250	$ 286	$ -	$ 286	$ 300
Dues, Licenses & Subscriptions	$ 175	$ 175	$ -	$ 175	$ 175
Total Administrative	**$ 135,601**	**$ 70,675**	**$ 49,570**	**$ 120,246**	**$ 139,847**
Maintenance					
Contract Services:					
Field Management	$ 17,912	$ 10,449	$ 7,463	$ 17,912	$ 18,808
Wetland Maintenance	$ 9,600	$ -	$ -	$ -	$ -
Mitigation Monitoring	$ 2,500	$ 9,600	$ 9,600	$ 19,200	$ 19,200
Landscape Maintenance	$ 288,264	$ 168,090	$ 120,065	$ 288,155	$ 302,677
Lake Maintenance	$ 9,600	$ 5,040	$ 5,040	$ 10,080	$ 10,700
Security Patrol	$ 36,400	$ 12,470	$ 16,999	$ 29,468	$ 41,250
Repairs & Maintenance					
Facility Maintenance	$ 29,120	$ 16,987	$ 12,133	$ 29,120	$ 30,576
Repairs & Maintenance	$ 11,000	$ 11,484	$ 5,000	$ 16,484	$ 19,000
Operating Supplies	$ 9,800	$ 3,175	$ 4,083	$ 7,258	$ 9,800
Landscape Replacement	$ 10,500	$ 10,063	$ -	$ 10,063	$ 15,000
Irrigation Repairs	$ 10,000	$ 1,198	$ 4,167	$ 5,364	$ 10,000
Alley Maintenance	$ 1,500	$ -	$ 625	$ 625	$ -
Stormwater Repairs & Maintenance	$ 1,500	$ -	$ 625	$ 625	$ -
Fountain Maintenance	$ 3,500	$ 1,370	$ 1,750	$ 3,120	$ 3,800
Sign Maintenance	$ 1,000	$ 199	$ 801	$ 1,000	$ -
Pressure Washing	$ 5,700	$ 8,350	$ -	$ 8,350	$ 8,000
Subtotal Maintenance	**$ 447,896**	**$ 258,474**	**$ 188,351**	**$ 446,825**	**$ 488,811**

Randal Park

Community Development District

General Fund

Description	Adopted FY2022 Budget	Actual Thru 4/30/22	Projected Next 5 Months	Total as of 9/30/22	Proposed FY2023 Budget
Utilities					
Utilities - Common Area	$ 30,000	$ 10,920	$ 12,500	$ 23,420	$ 30,000
Streetlighting	$ 110,000	$ 59,389	$ 42,544	$ 101,933	$ 110,000
Amenity Center					
Amenity Management	$ 79,441	$ 46,341	$ 33,100	$ 79,441	$ 87,385
Pool Attendants	$ 15,600	$ 1,256	$ 14,000	$ 15,256	$ 15,600
Pool Permit	$ 550	$ -	$ 505	$ 505	$ 550
Cable TV/Internet/Telephone	$ 4,000	$ 2,016	$ 1,456	$ 3,472	$ 4,415
Utilities - Amenity Center	$ 21,000	$ 8,819	$ 8,000	$ 16,819	$ 21,000
Refuse Service	$ 2,400	$ 1,497	$ 1,070	$ 2,567	$ 2,880
Amenity Center Access Cards	$ 1,000	$ -	$ 1,000	$ 1,000	$ 1,000
HVAC Maintenance	$ 574	$ 95	$ 479	$ 574	$ 574
Special Events	$ 13,962	$ 13,239	$ 400	$ 13,639	$ 14,962
Holiday Decorations	$ 4,410	$ 8,179	$ -	$ 8,179	$ 8,500
Security Monitoring	$ 600	$ 2,567	$ 775	$ 3,342	$ 1,920
Janitorial Services	$ 16,000	$ 11,037	$ 6,750	$ 17,787	$ 18,600
Pool Maintenance	$ 15,330	$ 9,378	$ 6,750	$ 16,128	$ 17,000
Pool Repairs & Maintenance	$ 3,200	$ 1,809	$ 1,333	$ 3,142	$ -
Fitness Repairs & Maintenance	$ 5,000	$ 1,681	$ 2,083	$ 3,765	$ 5,000
Amenity Repairs & Maintenance	$ 1,480	$ -	$ 617	$ 617	$ 5,480
Pest Control	$ 650	$ 300	$ 300	$ 600	$ 1,180
Other					
Property Insurance	$ 36,925	$ 34,743	$ -	$ 34,743	$ 41,692
Contingency	$ 4,625	$ 4,931	$ 1,000	$ 5,931	$ 7,500
Transfer Out - Capital Reserve	$ 74,426	$ -	$ 74,426	$ 74,426	$ 1,530
Subtotal Maintenance	**$ 441,173**	**$ 218,198**	**$ 209,089**	**$ 427,287**	**$ 396,768**
Total Expenditures	**$ 1,024,670**	**$ 547,347**	**$ 447,010**	**$ 994,357**	**$ 1,025,426**
Net Change in Fund Balance	**$ -**	**$ 446,924**	**$ (413,579)**	**$ 33,345**	**$ 0**

	Adopted Budget FY2020	Adopted Budget FY2021	Adopted Budget FY2022	Proposed Budget FY2023
Net Assessments	$ 963,338	$ 963,338	$ 963,338	$ 963,338
Add: Discounts & Collections 6%	$ 61,490	$ 61,490	$ 61,490	$ 61,490
Gross Assessments	$ 1,024,828	$ 1,024,828	$ 1,024,828	$ 1,024,828
Assessable Units	797	904	904	904
Per Unit Assessment - Phases 1 - 5	$ 1,285.86	$ 1,191.80	$ 1,191.80	$ 1,191.80
Per Unit Assessment - Randal Walk	$ -	$ 700.60	$ 700.60	$ 700.60

Notes:

(1 thru 6) is shared costs with Colonial Properties

	Total Proposed FY2023 Budget	Shared Costs	Colonial Properties Allocation
1 Facilities Management & Maintenance	$ 18,808	$ 9,404	$ 3,997
2 Landscape Maintenance	$ 302,677	$ 75,669	$ 32,159
3 Lake Maintenance	$ 10,700	$ 1,323	$ 562
4 Irrigation Repairs	$ 10,000	$ 2,000	$ 850
5 Utilities	$ 30,000	$ 16,000	$ 6,800
6 Streetlighting	$ 110,000	$ 6,400	$ 2,720
	Totals:	**$ 110,796**	**$ 47,088**

Randal Park
Community Development District
GENERAL FUND BUDGET

REVENUES:

Special Assessments

The District will levy a non-ad valorem assessment on all of the assessable property within the District in order to pay for the operating expenditures during the fiscal year.

Colonial Properties Contribution

Per the cost share arrangement, this amount reflects 50% of the estimated maintenance cost for Dowden Rd and the offsite portion of Randal Park Blvd.

Miscellaneous Revenue

Represents estimated income the District may receive that is not accounted for in other categories.

Activities

Represents fees collected by onsite management company related to various activities operated by the District.

Rentals

The District allows members of the public to rent the Clubhouse for various functions such as birthday parties, anniversaries, weddings, etc.

EXPENDITURES:

Administrative:

Supervisor Fees

The Florida Statutes allows each supervisor to be paid $200 per meeting for the time devoted to District business and board meetings, not to exceed $4,800 per year. The amount is based upon five supervisors attending 12 monthly meetings.

FICA Expense

Represents the Employer's share of Social Security and Medicare taxes withheld from Board of Supervisors checks.

Annual Audit

The District is required by Florida Statutes to arrange for an independent audit of its financial records by an Independent Certified Public Accounting Firm. The District's auditing firm is Grau & Associates.

Trustee Fees

The District issued Series 2012, Series 2015 and Series 2018 Special Assessment Bonds that are deposited with a Trustee at Wells Fargo Bank.

Dissemination Agent

The District is required by the Security and Exchange Commission to comply with Rule 15c2-12(b) (5) which relates to additional reporting requirements for unrated bond issues. The District has contracted with Governmental Management Services – Central Florida, LLC to provide this service.

Arbitrage

The District has contracted with Grau & Associates to calculate the District's annual Arbitrage Rebate Liability on the Series 2012, Series 2015 and Series 2018 Special Assessment Bonds.

Engineering

The District's engineer will be providing general engineering services to the District, e.g. attendance and preparation for monthly board meetings, review invoices, etc. The District has contracted with Vanasse Hangen Brustlin, Inc.

Attorney

The District's legal counsel will be providing general legal services to the District, e.g. attendance and preparation for monthly meetings, preparation and review of agreements, resolutions, etc. The District has contracted with Latham, Shuker, Eden & Beaudine, LLP.

Assessment Administration

The District will contract to levy and administer the collection of a non-ad valorem assessment on all assessable property within the District. The district has contracted with Governmental Management Services – Central Florida, LLC.

Management Fees

The District has contracted with Governmental Management Services – Central Florida, LLC to provide Management, Accounting and Recording Secretary Services for the District. The services include, but not limited to, recording and transcription of board meetings, administrative services, budget preparation, all financial reporting, annual audits, etc.

Information Technology

Represents costs with Governmental Management Services – Central Florida LLC related to the District's information systems, which include but are not limited to video conferencing services, cloud storage services and servers, security, accounting software, etc.

Website Maintenance

Represents the costs associated with monitoring and maintaining the District's website created in accordance with Chapter 189, Florida Statutes. These services include site performance assessments, security and firewall maintenance, updates, document uploads, hosting and domain renewals, website backups, etc. The District is contracted with Governmental Management Services – Central Florida LLC.

Telephone

Telephone and fax machine.

Postage

Mailing of Board Meeting agenda packages, overnight deliveries, checks for vendors, and any other required correspondence.

Insurance

The District's general liability and public officials liability insurance coverage is provided by Florida Insurance Alliance (FIA). FIA specializes in providing insurance coverage to governmental agencies.

Printing & Binding

Printing and Binding agenda packages for board meetings, printing of computerized checks, stationary, envelopes etc.

Legal Advertising

Advertising of monthly board meetings, public hearings, and any services that are required to be advertised for public bidding, i.e. audit services, engineering service, maintenance contracts and any other advertising that may be required.

Other Current Charges

Bank charges and any other miscellaneous expenses incurred during the fiscal year.

Office Supplies

The District incurs charges for supplies that need to be purchased during the fiscal year, including copier and printer toner cartridges, paper, file folders, binders, pens, paper clips, and other such office supplies.

Property Appraiser

Represents the fees to be paid to the Orange County Property Appraiser for annual assessment roll administration.

Property Taxes

Represents the non-ad valorem assessment from Orange County that will be charged to the District.

Dues, Licenses & Subscriptions

The District is required to pay an annual fee to the Florida Department of Economic Opportunity for $175. This is the only expense under this category for the District.

Maintenance:

Contract Services:

Field Management

The District has contracted with Governmental Management Services – Central Florida, LLC to provide onsite field management of contracts for the District Services such as landscape and lake maintenance. Services to include weekly onsite inspections, meetings with contractors and monitoring of utility accounts.

Wetland Maintenance/Mitigation Monitoring

The District will be required to maintain and monitor the 298 acres of Jurisdictional Wetlands, Wetland Buffers, and Wetland Mitigation throughout the District. The amounts are based upon the estimated cost for the fiscal year.

Landscape Maintenance

The District has contracted with Yellowstone Landscape – Southeast, LLC to maintain the landscaping within the common areas of the District after installation of landscape material has been completed. The services include mowing, edging, trimming, weed and disease control, fertilization, pest control, pruning, weeding, mulching, irrigation inspections and litter removal.

Description	Monthly	Annually
Landscape Maintenance		
Dowden Road/AC-1	$6,324	$75,888
Phase 1-3/Amenity Center	$12,583	$150,993
Phase 4	$1,912	$22,938
Phase 5	$3,195	$38,336
Estimated Increase		$14,522
TOTAL		**$302,677**

Lake Maintenance

The District has stormwater management facilities designed to conform to the City of Orlando and South Florida Water Management District (SFWMD) criteria for pre-development versus post-development allowable discharge criteria and water quality treatment. The District has contracted with Applied Aquatic Management Inc. to maintain the lakes throughout the community that provide stormwater management.

Description	Monthly	Annually
Lake Maintenance	$840	$10,080
Estimated Increase		$504
Total		**$10,584**

Security Patrol

The District has contracted with the Orlando Police Department to provide security services throughout the fiscal year.

Repairs & Maintenance:

Facility Maintenance

The District has contracted with Governmental Management Services – Central Florida, LLC to provide routine repairs and maintenance on the District's common areas and amenities.

Repairs & Maintenance

Represents estimated cost for repairs and maintenance of various facilities throughout the District.
Operating Supplies

Estimated cost of supplies purchased for operating and maintaining the clubhouse.

Landscape Replacement

Estimated cost related to the replacement of turf, trees, shrubs, etc.

Irrigation Repairs

To record expenses for repairs to the irrigation system.

Alley Maintenance

To record expenses for repairs and maintenance to the alley.

Stormwater Repairs & Maintenance

Represents estimated costs that the District will incur for repairs and maintenance on the stormwater management facilities, including: outfall structures, pipes and other miscellaneous facilities.

Fountain Maintenance

To record expenses for repairs and maintenance to the floating fountain at the Randal Park Clubhouse.

Description	Amount	Annually
Fountain Maintenance		
Clubhouse: Fountain Design Group, Inc. (Quarterly)	$175	$700
Phase II Park: Roberts Pool Service (Monthly)	$150	$1,800
Contingency		$1,300
TOTAL		**$3,800**

Sign Maintenance

To record expenses to replace miscellaneous signs throughout the fiscal year.

Pressure Washing

To record expenses related to the pressure washing of various areas of the District including the clubhouse, pool deck, curbs and sidewalks.

Utilities:

Utilities – Common Area

Represents the estimated cost for electric and reclaimed water utilities of the common areas within the District. The Orlando Utilities Commission provides these services.

Streetlighting

Orlando Utilities Commission provides for the streetlights within the community.

Amenity Center:

Amenity Management

The District has contracted with Governmental Management Services – Central Florida, LLC to staff the Amenity Center, oversee maintenance contracts related to the Amenity Center, conduct various special events throughout the year, administer rental program, respond to resident request, etc.

Pool Attendants

Represents the estimated cost to have pool attendants during certain times throughout the operating season for the pool.

Pool Permit

Estimated cost for required pool permit.

Cable TV/Internet/Telephone

The District has cable television, cable, internet service, and music services at the Amenity Center.

Description	Monthly	Annually
Cable TV/Internet/Telephone		
Brighthouse Networks	$291	$3,492
Contingency		$923
TOTAL		**$4,415**

Utilities – Amenity Center

This represents the estimated cost for electric and reclaimed water utilities of the Amenity Center. The Orlando Utilities Commission provides these services.

Refuse Service

Estimated cost for trash removal service located at the Amenity Center. The Orlando Utilities Commission provides this service.

Description	Monthly	Annually
Refuse Services	$240	$2,880
TOTAL		**$2,880**

Amenity Center Access Cards

Represents the estimated cost for providing and maintaining access card system.

HVAC Maintenance

The District will have preventative maintenance performed on the HVAC system.

Special Events

The Leisure Activities Coordinator will coordinate and provide various activities throughout the year. The amount represents the cost of supplies, notice of events, etc.

Holiday Decorations

The District will incur costs to related to the decoration of common areas during the Holidays.

Security Monitoring

The District incurs charges for the monitoring of the Amenity Center security system.

Description	Monthly	Annually
Synergy	$35	$420
Wi-Pak	$125	$1,500
TOTAL		**$1,920**

Janitorial Services

The District has contracted with Rugby Commercial Cleaning, Inc. to provide janitorial services and supplies for the Amenity Center. The amount is based upon 5 days per week throughout the fiscal year. Cintas also provides cleaning services for the District's amenity bathroom mats.

Description	Monthly	Annually
Rugby Commercial Cleaning, Inc.	$1,365	$16,380
Cintas - Mat Cleanings		$1,500
Janitorial Supplies/Materials		$720
TOTAL		**$18,600**

Pool Maintenance

The District will contract with respective companies to provide pool chemicals and pool maintenance services.

Description	Monthly	Annually
Pool Maintenance		
Spies Pools (Chemicals)	$750	$9,000
Roberts Pool Service	$600	$7,200
Contingency		$800
TOTAL		**$17,000**

Pool Repairs & Maintenance

Estimated miscellaneous pool maintenance cost not included under the agreements with Spies Pools and Roberts Pool Service.

Fitness Repairs & Maintenance

Represents costs related to repairing and maintaining the fitness equipment owned by the District. The amount includes preventative maintenance provided at $25 bi monthly for 7 fitness machines.

Amenity Repairs & Maintenance

Represents estimated cost for repairs and maintenance of the amenity center.

Pest Control

The District has contracted with Arrow Environmental for monthly treatment at the Amenity Center

Description	Monthly	Annually
Pest Control	$50	$600
Termite Bond		$580
TOTAL		**$1,180**

Other:

Property Insurance

Represents the estimated cost for property insurance of the Amenity Center to be conveyed to the District. Property Insurance is provided by Florida Insurance Alliance.

Contingency

Represents unforeseen cost not budgeted in other line items.

Transfer Out - Capital Reserve

The District will fund an annual amount for future cost related to replacement and repair of capital assets of the District. Upon completion, the District may have a Capital Reserve study prepared to ensure annually funding

Randal Park

Community Development District

Capital Reserve Fund

Description	Adopted FY2022 Budget	Actual Thru 4/30/22	Projected Next 5 Months	Total as of 9/30/22	Proposed FY2023 Budget
Revenues					
Interest	$ 500	$ 403	$ -	$ 403	$ 500
Carry Forward Surplus	$ 377,198	$ 369,114	$ -	$ 369,114	$ 254,405
Total Revenues	**$ 377,698**	**$ 369,518**	**$ -**	**$ 369,518**	**$ 254,905**
Expenditures					
Capital Outlay	$ 25,000	$ 29,941	$ -	$ 29,941	$ 25,000
Walking Path Repair	$ 75,000	$ -	$ 75,000	$ 75,000	$ -
Splash Pad	$ 18,000	$ 17,062	$ -	$ 17,062	$ -
Pergola staining/repairs	$ 10,000	$ -	$ 9,500	$ 9,500	$ -
Painting Parking lot fencing	$ 3,500	$ -	$ 3,000	$ 3,000	$ -
Fountain	$ 20,000	$ 4,584	$ 15,416	$ 20,000	$ -
Shade Structures	$ -	$ -	$ 35,000	$ 35,035	$ 115,000
Soccer Field Turf Replacement	$ -	$ -	$ -	$ -	$ 6,000
Roof	$ -	$ -	$ -	$ -	$ -
Total Expenditures	**$ 151,500**	**$ 51,587**	**$ 137,916**	**$ 189,538**	**$ 146,000**
Other Financing Sources/(Uses)					
Tranfer In/Out	$ 74,426	$ -	$ 74,426	$ 74,426	$ 1,530
Total Other Financing Sources/(Uses)	**$ 74,426**	**$ -**	**$ 74,426**	**$ 74,426**	**$ 1,530**
Excess Revenue/(Expenditures)	**$ 300,624**	**$ 317,930**	**$ (63,490)**	**$ 254,405**	**$ 110,435**

Randal Park

Community Development District

Debt Service - Series 2012

Description	Adopted FY2022 Budget	Actual Thru 4/30/22	Projected Next 5 Months	Total as of 9/30/22	Proposed FY2023 Budget
Revenues					
Assessments	$ 397,350	$ 395,927	$ 4,262	$ 400,189	$ 397,350
Interest	$ 100	$ 81	$ -	$ 81	$ 100
Carry Forward Surplus	$ 361,874	$ 366,216	$ -	$ 366,216	$ 385,361
Total Revenues	**$ 759,324**	**$ 762,224**	**$ 4,262**	**$ 766,486**	**$ 782,811**
Expenditures					
Principal Payment - 11/01	$ 90,000	$ 90,000	$ -	$ 90,000	$ 95,000
Interest Payment - 11/01	$ 146,856	$ 146,856	$ -	$ 146,856	$ 144,269
Interest Payment - 05/01	$ 144,269	$ -	$ 144,269	$ 144,269	$ 141,538
Total Expenditures	**$ 381,125**	**$ 236,856**	**$ 144,269**	**$ 381,125**	**$ 380,806**
Excess Revenue/(Expenditures)	**$ 378,199**	**$ 525,368**	**$ (140,007)**	**$ 385,361**	**$ 402,004**

Interest Payment	$ 141,538
Principal Payment	$ 115,000
	$ 256,538

	Proposed Budget FY2023
Net Assessments	$ 397,350
Add: Discounts & Collections 6%	$ 25,363
Gross Assessments	$ 422,713

Randal Park
Community Development District
Series 2012 Special Assessment Bonds
Amortization Schedule

Date	Balance	Principal	Interest	Total
11/01/22	$ 4,375,000.00	$ 95,000.00	$ 144,268.75	$ 380,806.25
05/01/23	$ 4,280,000.00	$ -	$ 141,537.50	
11/01/23	$ 4,280,000.00	$ 115,000.00	$ 141,537.50	$ 394,553.13
05/01/24	$ 4,165,000.00	$ -	$ 138,015.63	
11/01/24	$ 4,165,000.00	$ 125,000.00	$ 138,015.63	$ 397,203.13
05/01/25	$ 4,040,000.00	$ -	$ 134,187.50	
11/01/25	$ 4,040,000.00	$ 125,000.00	$ 134,187.50	$ 389,546.88
05/01/26	$ 3,915,000.00	$ -	$ 130,359.38	
11/01/26	$ 3,915,000.00	$ 135,000.00	$ 130,359.38	$ 391,584.38
05/01/27	$ 3,780,000.00	$ -	$ 126,225.00	
11/01/27	$ 3,780,000.00	$ 140,000.00	$ 126,225.00	$ 388,162.50
05/01/28	$ 3,640,000.00	$ -	$ 121,937.50	
11/01/28	$ 3,640,000.00	$ 150,000.00	$ 121,937.50	$ 389,281.25
05/01/29	$ 3,490,000.00	$ -	$ 117,343.75	
11/01/29	$ 3,490,000.00	$ 160,000.00	$ 117,343.75	$ 389,787.50
05/01/30	$ 3,330,000.00	$ -	$ 112,443.75	
11/01/30	$ 3,330,000.00	$ 170,000.00	$ 112,443.75	$ 389,681.25
05/01/31	$ 3,160,000.00	$ -	$ 107,237.50	
11/01/31	$ 3,160,000.00	$ 180,000.00	$ 107,237.50	$ 388,962.50
05/01/32	$ 2,980,000.00	$ -	$ 101,725.00	
11/01/32	$ 2,980,000.00	$ 190,000.00	$ 101,725.00	$ 387,631.25
05/01/33	$ 2,790,000.00	$ -	$ 95,906.25	
11/01/33	$ 2,790,000.00	$ 205,000.00	$ 95,906.25	$ 389,765.63
05/01/34	$ 2,585,000.00	$ -	$ 88,859.38	
11/01/34	$ 2,585,000.00	$ 215,000.00	$ 88,859.38	$ 385,328.13
05/01/35	$ 2,370,000.00	$ -	$ 81,468.75	
11/01/35	$ 2,370,000.00	$ 230,000.00	$ 81,468.75	$ 385,031.25
05/01/36	$ 2,140,000.00	$ -	$ 73,562.50	
11/01/36	$ 2,140,000.00	$ 250,000.00	$ 73,562.50	$ 388,531.25
05/01/37	$ 1,890,000.00	$ -	$ 64,968.75	
11/01/37	$ 1,890,000.00	$ 265,000.00	$ 64,968.75	$ 385,828.13
05/01/38	$ 1,625,000.00	$ -	$ 55,859.38	
11/01/38	$ 1,625,000.00	$ 285,000.00	$ 55,859.38	$ 386,921.88
05/01/39	$ 1,340,000.00	$ -	$ 46,062.50	
11/01/39	$ 1,340,000.00	$ 300,000.00	$ 46,062.50	$ 381,812.50
05/01/40	$ 1,040,000.00	$ -	$ 35,750.00	
11/01/40	$ 1,040,000.00	$ 325,000.00	$ 35,750.00	$ 385,328.13
05/01/41	$ 715,000.00	$ -	$ 24,578.13	
11/01/41	$ 715,000.00	$ 345,000.00	$ 24,578.13	$ 382,296.88
05/01/42	$ 370,000.00	$ -	$ 12,718.75	
11/01/42	$ 370,000.00	$ 370,000.00	$ 12,718.75	$ 382,718.75
		$ 4,375,000.00	**$ 3,765,762.50**	**$ 8,140,762.50**

Randal Park

Community Development District

Debt Service - Series 2015

Description	Adopted FY2022 Budget	Actual Thru 4/30/22	Projected Next 5 Months	Total as of 9/30/22	Proposed FY2023 Budget
Revenues					
Assessments	$ 596,080	$ 580,127	$ 6,244	$ 586,371	$ 596,080
Interest	$ 125	$ 113	$ -	$ 113	$ 125
Carry Forward Surplus	$ 491,475	$ 502,665	$ -	$ 502,665	$ 504,210
Total Revenues	**$ 1,087,680**	**$ 1,082,906**	**$ 6,244**	**$ 1,089,150**	**$ 1,100,415**
Expenditures					
Principal Payment - 11/01	$ 170,000	$ 170,000	$ -	$ 170,000	$ 180,000
Interest Payment - 11/01	$ 206,803	$ 206,696	$ -	$ 206,696	$ 203,190
Special Call - 02/01	$ -	$ 5,000	$ -	$ 5,000	$ -
Interest Payment - 02/01	$ -	$ 53	$ -	$ 53	$ -
Interest Payment - 05/01	$ 203,190	$ -	$ 203,190	$ 203,190	$ 199,365
Total Expenditures	**$ 579,993**	**$ 381,749**	**$ 203,190**	**$ 584,939**	**$ 582,555**
Excess Revenue/(Expenditures)	**$ 507,687**	**$ 701,157**	**$ (196,946)**	**$ 504,210**	**$ 517,860**

Interest Payment	$ 199,365
Principal Payment	$ 185,000
	$ 384,365

	Proposed Budget FY2023
Net Assessments	$ 596,080
Add: Discounts & Collections 6%	$ 38,048
Gross Assessment	$ 634,128

Randal Park
Community Development District
Series 2015 Special Assessment Bonds
Amortization Schedule

Date	Balance	Principal	Interest	Total
11/01/22	$ 8,060,000.00	$ 180,000.00	$ 203,190.00	$ 582,555.00
05/01/23	$ 7,880,000.00	$ -	$ 199,365.00	
11/01/23	$ 7,880,000.00	$ 185,000.00	$ 199,365.00	$ 579,798.75
05/01/24	$ 7,695,000.00	$ -	$ 195,433.75	
11/01/24	$ 7,695,000.00	$ 195,000.00	$ 195,433.75	$ 581,723.75
05/01/25	$ 7,500,000.00	$ -	$ 191,290.00	
11/01/25	$ 7,300,000.00	$ 200,000.00	$ 191,290.00	$ 578,330.00
05/01/26	$ 7,300,000.00	$ -	$ 187,040.00	
11/01/26	$ 7,300,000.00	$ 220,000.00	$ 187,040.00	$ 588,580.00
05/01/27	$ 7,080,000.00	$ -	$ 181,540.00	
11/01/27	$ 7,080,000.00	$ 230,000.00	$ 181,540.00	$ 587,330.00
05/01/28	$ 6,850,000.00	$ -	$ 175,790.00	
11/01/28	$ 6,850,000.00	$ 240,000.00	$ 175,790.00	$ 585,580.00
05/01/29	$ 6,610,000.00	$ -	$ 169,790.00	
11/01/29	$ 6,610,000.00	$ 255,000.00	$ 169,790.00	$ 588,205.00
05/01/30	$ 6,355,000.00	$ -	$ 163,415.00	
11/01/30	$ 6,355,000.00	$ 265,000.00	$ 163,415.00	$ 585,205.00
05/01/31	$ 6,090,000.00	$ -	$ 156,790.00	
11/01/31	$ 6,090,000.00	$ 280,000.00	$ 156,790.00	$ 586,580.00
05/01/32	$ 5,810,000.00	$ -	$ 149,790.00	
11/01/32	$ 5,810,000.00	$ 295,000.00	$ 149,790.00	$ 587,205.00
05/01/33	$ 5,515,000.00	$ -	$ 142,415.00	
11/01/33	$ 5,515,000.00	$ 310,000.00	$ 142,415.00	$ 587,080.00
05/01/34	$ 5,205,000.00	$ -	$ 134,665.00	
11/01/34	$ 5,205,000.00	$ 325,000.00	$ 134,665.00	$ 586,205.00
05/01/35	$ 4,880,000.00	$ -	$ 126,540.00	
11/01/35	$ 4,880,000.00	$ 340,000.00	$ 126,540.00	$ 584,580.00
05/01/36	$ 4,540,000.00	$ -	$ 118,040.00	
11/01/36	$ 4,540,000.00	$ 360,000.00	$ 118,040.00	$ 586,720.00
05/01/37	$ 4,180,000.00	$ -	$ 108,680.00	
11/01/37	$ 4,180,000.00	$ 375,000.00	$ 108,680.00	$ 582,610.00
05/01/38	$ 3,805,000.00	$ -	$ 98,930.00	
11/01/38	$ 3,805,000.00	$ 395,000.00	$ 98,930.00	$ 582,590.00
05/01/39	$ 3,410,000.00	$ -	$ 88,660.00	
11/01/39	$ 3,410,000.00	$ 415,000.00	$ 88,660.00	$ 581,530.00
05/01/40	$ 2,995,000.00	$ -	$ 77,870.00	
11/01/40	$ 2,995,000.00	$ 440,000.00	$ 77,870.00	$ 584,300.00
05/01/41	$ 2,555,000.00	$ -	$ 66,430.00	
11/01/41	$ 2,555,000.00	$ 460,000.00	$ 66,430.00	$ 580,900.00
05/01/42	$ 2,095,000.00	$ -	$ 54,470.00	
11/01/42	$ 2,095,000.00	$ 485,000.00	$ 54,470.00	$ 581,330.00
05/01/43	$ 1,610,000.00	$ -	$ 41,860.00	
11/01/43	$ 1,610,000.00	$ 510,000.00	$ 41,860.00	$ 580,460.00
05/01/44	$ 1,100,000.00	$ -	$ 28,600.00	
11/01/44	$ 1,100,000.00	$ 535,000.00	$ 28,600.00	$ 578,290.00
05/01/45	$ 565,000.00	$ -	$ 14,690.00	
11/01/45	$ 565,000.00	$ 565,000.00	$ 14,690.00	$ 579,690.00
		$ 8,060,000.00	**$ 5,947,377.50**	**$ 14,007,377.50**

Randal Park

Community Development District

Debt Service - Series 2018

Description	Adopted FY2022 Budget	Actual Thru 4/30/22	Projected Next 5 Months	Total as of 9/30/22	Proposed FY2023 Budget
Revenues					
Assessments	$ 117,674	$ 116,425	$ 1,253	$ 117,679	$ 117,674
Interest	$ 50	$ 14	$ -	$ 14	$ 50
Carry Forward Surplus	$ 51,236	$ 52,536	$ -	$ 52,536	$ 54,404
Total Revenues	**$ 168,960**	**$ 168,976**	**$ 1,253**	**$ 170,229**	**$ 172,128**
Expenditures					
Interest Payment - 11/01	$ 42,913	$ 42,913	$ -	$ 42,913	$ 42,298
Principal Payment - 05/01	$ 30,000	$ -	$ 30,000	$ 30,000	$ 30,000
Interest Payment - 05/01	$ 42,913	$ -	$ 42,913	$ 42,913	$ 42,298
Total Expenditures	**$ 115,825**	**$ 42,913**	**$ 72,913**	**$ 115,825**	**$ 114,595**
Excess Revenue/(Expenditures)	**$ 53,135**	**$ 126,063**	**$ (71,659)**	**$ 54,404**	**$ 57,533**

Interest Payment 11/1/23	$ 41,683
	$ 41,683

	Proposed Budget FY2023
Net Assessments	$ 117,674
Add: Discounts & Collections 6%	$ 7,511
Gross Assessment	$ 125,185

Randal Park
Community Development District
Series 2018 Special Assessment Bonds
Amortization Schedule

Date	Balance	Principal	Interest	Total
11/01/22	$ 1,680,000.00	$ -	$ 42,297.50	$ 42,297.50
05/01/23	$ 1,680,000.00	$ 30,000.00	$ 42,297.50	
11/01/23	$ 1,650,000.00	$ -	$ 41,682.50	$ 113,980.00
05/01/24	$ 1,650,000.00	$ 30,000.00	$ 41,682.50	
11/01/24	$ 1,620,000.00	$ -	$ 41,067.50	$ 112,750.00
05/01/25	$ 1,620,000.00	$ 35,000.00	$ 41,067.50	
11/01/25	$ 1,585,000.00	$ -	$ 40,280.00	$ 116,347.50
05/01/26	$ 1,585,000.00	$ 35,000.00	$ 40,280.00	
11/01/26	$ 1,550,000.00	$ -	$ 39,492.50	$ 114,772.50
05/01/27	$ 1,550,000.00	$ 35,000.00	$ 39,492.50	
11/01/27	$ 1,515,000.00	$ -	$ 38,705.00	$ 113,197.50
05/01/28	$ 1,515,000.00	$ 40,000.00	$ 38,705.00	
11/01/28	$ 1,475,000.00	$ -	$ 37,805.00	$ 116,510.00
05/01/29	$ 1,475,000.00	$ 40,000.00	$ 37,805.00	
11/01/29	$ 1,435,000.00	$ -	$ 36,905.00	$ 114,710.00
05/01/30	$ 1,435,000.00	$ 45,000.00	$ 36,905.00	
11/01/30	$ 1,390,000.00	$ -	$ 35,768.75	$ 117,673.75
05/01/31	$ 1,390,000.00	$ 45,000.00	$ 35,768.75	
11/01/31	$ 1,345,000.00	$ -	$ 34,632.50	$ 115,401.25
05/01/32	$ 1,345,000.00	$ 45,000.00	$ 34,632.50	
11/01/32	$ 1,300,000.00	$ -	$ 33,496.25	$ 113,128.75
05/01/33	$ 1,300,000.00	$ 50,000.00	$ 33,496.25	
11/01/33	$ 1,250,000.00	$ -	$ 32,233.75	$ 115,730.00
05/01/34	$ 1,250,000.00	$ 50,000.00	$ 32,233.75	
11/01/34	$ 1,200,000.00	$ -	$ 30,971.25	$ 113,205.00
05/01/35	$ 1,200,000.00	$ 55,000.00	$ 30,971.25	
11/01/35	$ 1,145,000.00	$ -	$ 29,582.50	$ 115,553.75
05/01/36	$ 1,145,000.00	$ 60,000.00	$ 29,582.50	
11/01/36	$ 1,085,000.00	$ -	$ 28,067.50	$ 117,650.00
05/01/37	$ 1,085,000.00	$ 60,000.00	$ 28,067.50	
11/01/37	$ 1,025,000.00	$ -	$ 26,552.50	$ 114,620.00
05/01/38	$ 1,025,000.00	$ 65,000.00	$ 26,552.50	
11/01/38	$ 960,000.00	$ -	$ 24,911.25	$ 116,463.75
05/01/39	$ 960,000.00	$ 65,000.00	$ 24,911.25	
11/01/39	$ 895,000.00	$ -	$ 23,270.00	$ 113,181.25
05/01/40	$ 895,000.00	$ 70,000.00	$ 23,270.00	
11/01/40	$ 825,000.00	$ -	$ 21,450.00	$ 114,720.00
05/01/41	$ 825,000.00	$ 75,000.00	$ 21,450.00	
11/01/41	$ 750,000.00	$ -	$ 19,500.00	$ 115,950.00
05/01/42	$ 750,000.00	$ 80,000.00	$ 19,500.00	
11/01/42	$ 670,000.00	$ -	$ 17,420.00	$ 116,920.00
05/01/43	$ 670,000.00	$ 85,000.00	$ 17,420.00	
11/01/43	$ 585,000.00	$ -	$ 15,210.00	$ 117,630.00
05/01/44	$ 585,000.00	$ 85,000.00	$ 15,210.00	
11/01/44	$ 500,000.00	$ -	$ 13,000.00	$ 113,210.00
05/01/45	$ 500,000.00	$ 90,000.00	$ 13,000.00	
11/01/45	$ 410,000.00	$ -	$ 10,660.00	$ 113,660.00
05/01/46	$ 410,000.00	$ 95,000.00	$ 10,660.00	
11/01/46	$ 315,000.00	$ -	$ 8,190.00	$ 113,850.00
05/01/47	$ 315,000.00	$ 100,000.00	$ 8,190.00	
11/01/47	$ 215,000.00	$ -	$ 5,590.00	$ 113,780.00
05/01/48	$ 215,000.00	$ 105,000.00	$ 5,590.00	
11/01/48	$ 110,000.00	$ -	$ 2,860.00	$ 113,450.00
05/01/49	$ 110,000.00	$ 110,000.00	$ 2,860.00	$ 112,860.00
		$ 1,680,000.00	**$ 1,463,202.50**	**$ 3,143,202.50**

Randal Park

Community Development District
General Fund Assessment Calculation

Description	Proposed FY2023 Budget	Randal Park	Randal Walk	Combined	Proposed FY2023 Total
Revenues					
Special Assessments	$ 963,338	$ 432,054	$ 8,600	$ 522,684	$ 963,338
Colonial Properties Contribution	$ 47,088	$ -	$ -	$ 47,088	$ 47,088
Miscellaneous Revenue	$ 1,000	$ -	$ -	$ 1,000	$ 1,000
Activities	$ 7,000	$ 7,000	$ -	$ -	$ 7,000
Rentals	$ 7,000	$ 7,000	$ -	$ 0	$ 7,000
Carry Forward Surplus	$ -	$ -	$ -	$ -	$ -
Total Revenues	**$ 1,025,427**	**$ 446,054**	**$ 8,600**	**$ 570,772**	**$ 1,025,427**
Expenditures					
Administrative					
Supervisor Fees	$ 12,000	$ -	$ -	$ 12,000	$ 12,000
FICA Expense	$ 900	$ -	$ -	$ 900	$ 900
Annual Audit	$ 4,500	$ -	$ -	$ 4,500	$ 4,500
Trustee Fees	$ 12,500	$ 8,000	$ 4,500	$ -	$ 12,500
Dissemination Agent	$ 10,500	$ 7,000	$ 3,500	$ -	$ 10,500
Arbitrage	$ 1,800	$ 1,200	$ 600	$ -	$ 1,800
Engineering	$ 10,000	$ -	$ -	$ 10,000	$ 10,000
Attorney	$ 20,000	$ -	$ -	$ 20,000	$ 20,000
Assessment Administration	$ 5,000	$ -	$ -	$ 5,000	$ 5,000
Management Fees	$ 43,882	$ -	$ -	$ 43,882	$ 43,882
Information Technology	$ 1,800	$ -	$ -	$ 1,800	$ 1,800
Website Maintance	$ 1,200	$ -	$ -	$ 1,200	$ 1,200
Telephone	$ 100	$ -	$ -	$ 100	$ 100
Postage	$ 650	$ -	$ -	$ 650	$ 650
Insurance	$ 7,440	$ -	$ -	$ 7,440	$ 7,440
Printing & Binding	$ 2,150	$ -	$ -	$ 2,150	$ 2,150
Legal Advertising	$ 2,250	$ -	$ -	$ 2,250	$ 2,250
Other Current Charges	$ 1,700	$ -	$ -	$ 1,700	$ 1,700
Office Supplies	$ 200	$ -	$ -	$ 200	$ 200
Property Appraiser	$ 800	$ -	$ -	$ 800	$ 800
Property Taxes	$ 300	$ -	$ -	$ 300	$ 300
Dues, Licenses & Subscriptions	$ 175	$ -	$ -	$ 175	$ 175
Total Administrative	**$ 139,847**	**$ 16,200**	**$ 8,600**	**$ 115,047**	**$ 139,847**
Maintenance					
Contract Services:					
Field Management	$ 18,808	$ -	$ -	$ 18,808	$ 18,808
Wetland Maintenance	$ -	$ -	$ -	$ -	$ -
Mitigation Monitoring	$ 19,200	$ -	$ -	$ 19,200	$ 19,200
Landscape Maintenance (75%/25%)	$ 302,677	$ 104,774	$ -	$ 197,903	$ 302,677
Lake Maintenance	$ 10,700	$ -	$ -	$ 10,700	$ 10,700
Security Patrol (75%/25%)	$ 41,250	$ 30,938	$ -	$ 10,313	$ 41,250
Repairs & Maintenance					
Facility Maintenance (75%/25%)	$ 30,576	$ 22,932	$ -	$ 7,644	$ 30,576
Repairs & Maintenance (75%/25%)	$ 19,000	$ 14,250	$ -	$ 4,750	$ 19,000
Operating Supplies (75%/25%)	$ 9,800	$ 7,350	$ -	$ 2,450	$ 9,800
Landscape Replacement (75%/25%)	$ 15,000	$ 11,250	$ -	$ 3,750	$ 15,000
Irrigation Repairs	$ 10,000	$ -	$ -	$ 10,000	$ 10,000
Alley Maintenance	$ -	$ -	$ -	$ -	$ -
Stormwater Repairs & Maintenance	$ -	$ -	$ -	$ -	$ -
Fountain Maintenance	$ 3,800	$ -	$ -	$ 3,800	$ 3,800
Sign Maintenance	$ -	$ -	$ -	$ -	$ -
Pressure Washing (20%/80%)	$ 8,000	$ 1,600	$ -	$ 6,400	$ 8,000
Subtotal Maintenance	**$ 488,811**	**$ 193,094**	**$ -**	**$ 295,717**	**$ 488,811**

Randal Park

Community Development District
General Fund Assessment Calculation

Description	Proposed FY2023 Budget	Randal Park	Randal Walk	Combined	Proposed FY2023 Total
Utilities					
Utilities - Common Area	$ 30,000	$ -	$ -	$ 30,000	$ 30,000
Streetlighting	$ 110,000	$ -	$ -	$ 110,000	$ 110,000
Amenity Center					
Amenity Management	$ 87,385	$ 87,385	$ -	$ -	$ 87,385
Pool Attendants	$ 15,600	$ 15,600	$ -	$ -	$ 15,600
Pool Permit	$ 550	$ 550	$ -	$ -	$ 550
Cable TV/Internet/Telephone	$ 4,415	$ 4,415	$ -	$ -	$ 4,415
Utilities - Amenity Center	$ 21,000	$ 21,000	$ -	$ -	$ 21,000
Refuse Service	$ 2,880	$ 2,880	$ -	$ -	$ 2,880
Amenity Center Access Cards	$ 1,000	$ 1,000	$ -	$ -	$ 1,000
HVAC Maintenance	$ 574	$ 574	$ -	$ -	$ 574
Special Events	$ 14,962	$ 14,962	$ -	$ -	$ 14,962
Holiday Decorations	$ 8,500	$ 8,500	$ -	$ -	$ 8,500
Security Monitoring	$ 1,920	$ 1,920	$ -	$ -	$ 1,920
Janitorial Services	$ 18,600	$ 18,600	$ -	$ -	$ 18,600
Pool Maintenance	$ 17,000	$ 17,000	$ -	$ -	$ 17,000
Pool Repairs & Maintenance	$ -	$ -	$ -	$ -	$ -
Fitness Repairs & Maintenance	$ 5,000	$ 5,000	$ -	$ -	$ 5,000
Amenity Repairs & Maintenance	$ 5,480	$ 5,480	$ -	$ -	$ 5,480
Pest Control	$ 1,180	$ 1,180	$ -	$ -	$ 1,180
Other					
Property Insurance (70%/30%)	$ 41,692	$ 29,184	$ -	$ 12,508	$ 41,692
Contingency	$ 7,500	$ -	$ -	$ 7,500	$ 7,500
Transfer Out - Capital Reserve	$ 1,530	$ 1,530	$ -	$ -	$ 1,530
Subtotal Maintenance	**$ 396,768**	**$ 236,761**	**$ -**	**$ 160,008**	**$ 396,768**
Total Expenditures	**$ 1,025,426**	**$ 446,054**	**$ 8,600**	**$ 570,772**	**$ 1,025,426**
Excess Revenue/(Expenditures)	**$ 0**	**$ -**	**$ -**	**$ 0**	**$ 0**

Net Assessments	$ 432,054	$ 8,600	$ 522,684	$ 963,338
Add: Discounts and Collections (6%)	$ 27,578	$ 549	$ 33,363	$ 61,490
Gross Assesment	$ 459,632	$ 9,149	$ 556,046	$ 1,024,828
Assessable Units	797	107	904	Total
Per Unit Assessments - Phases 1 - 5	$ 576.70	$ -	$ 615.10	$ 1,191.80
Per Unit Assessments - Randal Walk	$ -	$ 85.50	$ 615.10	$ 700.60

Randal Park

Community Development District
Assessments Schedule - FY2023

Phase 1A and 1B	No. Of Units	Per Unit, O & M	Series 2012	Series 2015	Series 2018	Total
Single Family 40'	83	$ 1,192	$ 1,072	$ -	$ -	$ 2,264
Single Family 50'	106	$ 1,192	$ 1,126	$ -	$ -	$ 2,318
Single Family 60'	50	$ 1,192	$ 1,179	$ -	$ -	$ 2,371
Townhome	0	$ -	$ -	$ -	$ -	$ -

Phase 2 & 3	No. Of Units	Per Unit, O & M	Series 2012	Series 2015	Series 2018	Total
Single Family 40'	27	$ 1,192	$ 1,072	$ 301	$ -	$ 2,565
Single Family 50'	27	$ 1,192	$ 1,126	$ 251	$ -	$ 2,569
Single Family 60'	24	$ 1,192	$ 1,179	$ 202	$ -	$ 2,573
Townhome	83	$ 1,192	$ 805	$ 314	$ -	$ 2,310
Townhome	5	$ 1,192	$ -	$ 1,117		$ 2,309

Phase 4 & 5	No. Of Units	Per Unit, O & M	Series 2012	Series 2015	Series 2018	Total
Single Family 40'	33	$ 1,192	$ -	$ 1,551	$ -	$ 2,743
Single Family 50'	119	$ 1,192	$ -	$ 1,631	$ -	$ 2,822
Single Family 60'	105	$ 1,192	$ -	$ 1,705	$ -	$ 2,896
Townhome	135	$ 1,192	$ -	$ 1,165	$ -	$ 2,356

Randal Walk	No. Of Units	Per Unit, O & M	Series 2012	Series 2015	Series 2018	Total
Single Family 40'	0	$ -	$ -	$ -	$ -	$ -
Single Family 50'	0	$ -	$ -	$ -	$ -	$ -
Single Family 60'	0	$ -	$ -	$ -	$ -	$ -
Townhome	107	$ 701	$ -	$ -	$ 1,170	$ 1,871

Total Units	904

SECTION VI

FREEMOTION

b22.7 COACHBIKE™

MODEL # **FMEX82820**

CARDIO COACHBIKE™

The most interactive machine on the market, the Freemotion CoachBike™ transports cyclists to breathtaking locations around the globe. Top instructors motivate and inspire the rider to push themselves a little harder, helping to better maximize their output. An innovative and inspiring machine, the CoachBike™ reimagines the way we view workouts, giving each user their own unique and personal training experience.

FREEMOTION

COACHBIKE™

PRODUCT FEATURES

INTERACTIVE AND ENGAGING WORKOUT EXPERIENCE

A stunning 22-inch high-definition display delivers a near-endless library of iFit coaching sessions lead by more than 100 top trainers who motivate and inspire riders to continually push themselves. With Google Maps™, users may also create an endless supply of real-time, interactive routes.

AUTO-ADJUSTING

The interactive training experience leads users up 20% inclines and down 10% declines as the program automatically controls the bike's resistance, incline, and decline.

IMMERSIVE RIDE

With versatile handlebars, dual-sided pedals (SPD and toe strap), and an ergonomic resistance shifting system that auto-adjusts to virtual terrain changes, the CoachBike delivers a personalized and immersive riding experience.

AUTOBREEZE™ WORKOUT FAN

Riders stay cool throughout their workout with a conveniently-located 3-Speed Fan or select the AutoBreeze™ feature to enjoy a variable flow that responds to their cycling pace.

PERSONAL FIT

The simple adjustment knobs quickly provide many different saddle and handlebar combinations to fit every body type, ensuring each user receives a personal riding experience.

GATES CARBON DRIVE™ SYSTEM

This maintenance-free carbon drive system delivers the same quiet, smooth ride that a belt drive provides, with the strength and efficiency of a chain.

EASE OF MAINTENANCE

One of the most maintenance-friendly bikes on the market, the magnetic resistance system, carbon belt, rust-resistant aluminum frames, and hidden stainless steel hardware make it easy to clean and maintain without the need for replacement parts.

WARRANTY | NORTH AMERICA

7-Year Frame | 5-Year Belt | 2-Year Parts (Mechanical & Electronic) & Console | 1-Year Labor | 6-Month Wear Items

SPECIFICATIONS

Programs	Expansive iFit Library New Programs Added Daily
Google Maps™	Enabled
Tilting Display	22-inch (55.8 cm) HD Touchscreen
Decline/Incline	-10% to 20%
Workout Fan	AutoBreeze™ Fan
Accessories Holder(s)	Accessories Tray Dual Water Bottle Holders
Dual-Sided Pedals	Toe Strap and SPD (Shimano Pedaling Dynamics)
Connectivity	Ethernet or Wifi-min. 10 Mbps
Frame	Lightweight Aluminum Frame
Drive System	Gates Carbon GT Belt Drive System
Resistance System	Eddy Current Magnetic Resistance
Weight Capacity	350 lbs (159 kg)
Power Requirements	AC Plug-in (120/240V)
Product Dimensions (LxWxH)	57 x 24 x 63 in (144.8 x 61 x 160 cm)
Product Weight	168 lbs
Shipping Dimensions (LxWxH)	48.5 x 17.1 x 38 (123.2 x 43.4 x 96.5 cm)
Shipping Weight	200 lbs

+1 877-363-8449 | sales@freemotionfitness.com | freemotionfitness.com

FREEMOTION

FACILITY SPECIFICATION REQUIREMENTS

ELECTRICAL POWER

CoachBikes can be powered by a standard 15A Circuit. A maximum of five (5) bikes may be run safely on a single circuit.

NETWORK CONNECTIVITY

Freemotion requires a minimum of Category 5e (Cat5e) twisted pair ethernet cable. Freemotion recommends Category 6 (Cat6) twisted pair ethernet cable to ensure stable and efficient connection.

Freemotion requires all switching devices to be capable of handling up to 10/100/1000 Mbps, and a dedicated network connection for each connected fitness product. All connected products, whether on WiFi or via Ethernet, should be on a secure and protected network capable of providing a minimum bandwidth of 10 Mbps per unit.

+1 877-363-8449 | sales@freemotionfitness.com | freemotionfitness.com

FREEMOTION

r10.9b RECUMBENT BIKE

MODEL # **FMEX82518**

SMARTSERIES™ POWERED BY IFIT®

This upgraded biking experience comes with a simplified console made smarter with the addition of the member's smartphone. Use "as is" and the bike tracks workout essentials such as calories, time and distance. Sync a personal device and choose from workouts filmed on location around the world and the bike will match the workout with increased/decreased speed and resistance.

FREEMOTION

iFIT

SMARTSERIES™ r10.9b RECUMBENT BIKE

PRODUCT FEATURES

SIMPLIFIED USER INTERFACE
Users can keep an eye on everything that keeps them motivated: RPM/speed, distance/time, watts/calories, level and heart rate on the LED display.

IFIT® ENABLED WITH SMARTPHONE OR TABLET
The console of the r10.9b Recumbent Bike goes from simple to interactive when synced with a smartphone or tablet. As the industry's first "Bring Your Own Device"-solution, the elliptical has resistance matching technology to recreate the actual terrain of video workouts filmed around the world.

STEP THRU™ DESIGN
This bike's innovative design eliminates the traditional base, making it easier to get on and off the bike.

CONNECTED ENTERTAINMENT
No additional wiring needed; this Freemotion machine comes with a USB charging port 3.5 mm audio out and TV input.

DIGITAL RESISTANCE CONTROL
No hand cranks needed, this bike's digital resistance makes it easy to control how tough the workout is.

1-24 RESISTANCE LEVELS
With a full range of resistance levels, this ride meets clients at their current fitness level and helps them reach the next one.

ELECTRONIC READOUTS
Speed, Resistance, RPM, Distance, Calories, Time and Heart Rate, Watts, Pace, Enter +/- Button for Age and Weight.

SPECIFICATIONS

Resistance System	Hybrid Generator Resistance System
Crank	3-Piece Crank
Transport Wheels	2 in / 5 cm transport wheels
Display Type	LED display
Resistance Levels	1-40 levels
Electronic Readouts	Speed, level, RPM, distance, calories, time, heart rate, WATT
CSAFE	Compatible
Maximum User Weight	400 lbs / 182 kg
Machine Weight	88.2 lbs / 40 kg
Equipment Dimensions (L x W x H)	70.8 x 24.5 x 50.8 in 180 x 62.2 x 129 cm
Equipment Weight	198 lbs / 89.8 kg
Shipping Dimensions (L x W x H)	57.6 x 25.9 x 33.2 in 146.5 x 65.9 x 33.2 cm
Shipping Weight	198 lbs / 89.8 kg
Power Requirements	110 VAC, 240 VAC
Regulatory Approvals	FCC, TUV, C/US, C-Tick, CE, EN957 Class S

WARRANTY | US AND INTERNATIONAL

7 Years - Frame, and Drive Motor | **2 Years** - Parts | **1 Year** - Labor (US Only)

3 Years - Parts | **3 Year** - Labor (US Only) *(Non dues paying facilities with the exception of University Rec Centers).*

OPTIONAL

HD Personal TV 15.6 in / 39 cm

FMTV82518-16 | FMTV82518-16INT

900/800 MHz Receiver - MYE900RCVR

+1 877.363.8449 | sales@FreemotionFitness.com | FreemotionFitness.com

QUOTE

RemitTo	Contact	Territory Manager
Freemotion Fitness PO Box 7410479 Chicago, IL 60674-0479 United States	Kaden Jackson PH: (435) 786-2944 FAX: kaden.jackson@ifit.com	Debra Wilhelm PH: 4353393487 debra.wilhelm@ifit.com

SoldTo	ShipTo	BillTo
RANDALL PARK ATTN: Alexandra Penagos 8730 Randal Park Blvd ORLANDO, FL, 32832 USA	Alexandra Penagos Attn: Alexandra Penagos 135 W Central Blvd Orlando, FL 32801 USA PH: 407-841-5524 apenagos@gmscfl.com	Alexandra Penagos 135 W Central Blvd Orlando, FL 32801 USA

Quote #
Q-28755
Customer #
Quote Created
5/2/2022
Quote Expires
6/3/2022
Quote Terms*
CIA

New

Qty	Model #	Description	List Price	Unit Price	Ext. Price
1	FMEX82820	Freemotion b22.7 CoachBike™_ 22 in HD Touchscreen_iFit_120/220V	USD 6,999.00	USD 3,899.00	USD 3,899.00
1	UTCOMEB4002	Freemotion Warranty Extension_Bike 3yr Parts & Labor	USD 399.00	USD 0.00	USD 0.00
1	FMEX82518	Freemotion r10.9b Recumbent Bike_LED_iFit Sync_Self-Powered	USD 4,599.00	USD 2,699.00	USD 2,699.00

Subtotal:	**USD 6,598.00**
Tax:	USD 508.55
Install:	USD 500.00
Freight:	USD 527.84
Fuel Surcharge:	USD 197.94
Total Units:	2
Total:	**USD 8,332.33**

Notes/Other Info:

-

- Quote valid until date listed above. Please sign and return to the contact listed above to place your order.
- The Freemotion Cable Cross, Chest & Shoulder are ADA compliant/wheelchair accessible. A maximum tax credit of $5,000 per year may be applicable. Reference Section 44 of the IRS tax code.

Quote #	Q-28755	Quote Total	USD 8,332.33

Signature:

_____

Date:

_____

Your signature indicates that the EQUIPMENT, COLOR and ADDRESS information on this quote are correct. Please sign and return all pages to the contact listed above to place your order.

Thank you for your purchase of Freemotion equipment. If you have elected to pay any portion of this order with a credit card, your signature on this document will authorize your card to be charged as per our credit card terms and conditions. Charges will appear under the name 'ICON AR' on your credit card statement.

Net 30 day terms on approved credit for customers without prior existing terms.

- Quote valid until date listed above. Please sign and return to the contact listed above to place your order.
- The Freemotion Cable Cross, Chest & Shoulder are ADA compliant/wheelchair accessible. A maximum tax credit of $5,000 per year may be applicable. Reference Section 44 of the IRS tax code.

FREEMOTION FITNESS TERMS AND CONDITIONS

The goods listed on the face of this Customer Order have been sold to you ("Buyer") subject to the terms and conditions set forth herein, all of which you agree to by your acceptance of such goods. Additionally, all future orders placed by FreeMotion Fitness ("FMF") will be accepted only on the following terms and conditions, all of which you, as Buyer, accept and agree to by the placement of such orders.

1) Prior Written Contract. To the extent that these terms and conditions are covered by a prior written contract signed by FMF and Buyer, the terms and conditions in that contract are intended to govern, excepting terms of payment, which shall be governed by the installment sale provisions on the face of the Customer Order. To the extent that the order being supplied by this invoice is not expressly covered by a prior written contract, this invoice contains all of the terms and conditions with respect to the sale and purchase of the goods named herein. If any of the provisions of the Buyer's purchase order or other unsigned writings are in conflict with the terms and conditions of this invoice, the terms and conditions of this invoice shall govern.

2) Buyer's Duty to Inspect and Claims for Loss or Damage in Shipping. Buyer must immediately inspect all goods for shortages, conformity with order and defects. All goods claimed to be defective shall be held for inspection by FMF. Claims for shortage or deductions for erroneous charges must be presented within fifteen (15) days after receipt of the goods or they will be disallowed. No goods will be taken back and credited or replaced unless authorization for return has been given by FMF's Customer Service Department. Claims for goods damaged in shipment must be made directly with the carrier.

3) Acceptance of Goods and Returns. Buyer shall be deemed to have accepted all goods covered by this invoice if Buyer fails to reject and return the goods within fifteen (15) days of the receipt of goods. If Buyer chooses to reject any of the goods covered by this invoice, for whatever reason, Buyer must first notify FMF. No returns will be accepted after (15) days from receipt of goods or received by FMF over thirty (30) days after initial delivery to buyer. Buyer agrees to pay FMF (a) restocking fee of 20% of the sales price of the returned items, and (b) all shipping charges, including return shipping costs.

4) Deliveries. The acceptance of shipment by the Buyer when the goods are delivered by a common carrier, licensed public Driver, Buyer's own or leased carrier, or by FMF's own or leased carrier shall constitute a delivery.

(a) In the instance of goods held subject to the Buyer's instruction, or for which the Buyer has failed to supply shipping instructions, or in any case where FMF, in its sole discretion, determines that any part of the goods purchased by the Buyer should be held for Buyer's account, FMF may invoice the goods and Buyer agrees to make payment at the maturity of the invoice so rendered. Goods invoiced and held at any location for whatever reason shall be at Buyer's risk and FMF may charge for insurance and storage at prevailing rates.

(b) No freight, express or delivery charges shall be subject to discount.

(c) Delivery of a quantity which does not vary more than ten percent (10%) greater or less than the quantity ordered shall constitute compliance under the Customer's Purchase Order.

(d) Partial delivery shall be accepted by the Buyer and paid at contract terms and prices. All sample requirements furnished on this order shall be charged for by FMF and paid for by the Buyer. Delay in delivering samples or other sample requirements shall not constitute a breach of this invoice. Delivery or tender of delivery of any installment within fifteen (15) days after the time specified therefore shall be deemed timely delivery. Thereafter, shipment or tender of delivery prior to receipt of written cancellation shall constitute good delivery. Any defect in quality or delays in delivery shall not affect the balance of this invoice. Any delivery not in dispute shall be paid for on the due date, without offset, defense or counterclaims and regardless of controversies relating to other delivered and undelivered merchandise. Where the Buyer has declared or manifested an intention that it will not accept delivery in accordance with the provisions of this invoice, no tender shall be necessary but FMF may at its option give notice in writing to the Buyer that FMF is ready and willing to deliver in accordance with the provisions of the invoice and such notice shall constitute a valid tender of delivery.

5) Time of the Essence. FMF shall not be liable for default in delivery or delays in shipment for any cause beyond FMF's reasonable control. Buyer requested changes may result in additional charges. FMF will refund Must On Service charges if date requested cannot be met.

6) Risk of Loss. Buyer bears the risk of loss for any specialty items or goods ordered and not readily saleable by FMF to other parties from the time they leave FMF's facilities and are placed with a carrier for shipment to Buyer. Risk of loss as to other goods will be governed by applicable provisions of the Utah Uniform Commercial Code. If a shipment is made FOB shipping point or if, at Buyer's request, freight is prepaid by FMF and invoiced to Buyer, Buyer bears all risk of loss for all goods covered by this invoice from the time they are placed with the carrier by FMF.

7) Purchase Money Security Interest. If the goods described on this invoice are delivered to Buyer without full payment therefore or through the extension of any credit by FMF to Buyer, FMF retains and Buyer hereby grants FMF a purchase money security interest in and to all the goods covered by this invoice to secure the payment of all amounts due hereunder, including principal, interest, freight charges and other expenses incurred by FMF in connection with the sale of the goods and collection of the amount due hereunder. The purchase money security interest granted herein shall be automatically perfected without filing pursuant to the Utah Uniform Commercial Code. Upon any default by Buyer under this invoice, FMF may declare immediately due and payable all amounts secured hereby.

8) Future Orders Placed with FMF. Future orders placed by Buyer with FMF shall be placed by Buyer and accepted by FMF subject to the terms and conditions contained herein, irrespective of any provisions contained in buyer's purchase orders. Upon FMF's acceptance of an order by Buyer, such order shall be non-cancelable.

9) Credit and Default. FMF may, at any time and from time to time, in it's sole discretion modify or cancel the credit of Buyer as to time and amount, and as a consequence may require and demand payment in cash before delivery of any unfilled portion of an invoice. Buyer shall be in default hereunder upon the occurrence of any of the following:

(a) Buyer fails to make payments when due;

(b) Buyer fails to perform any other obligations as required hereunder or under the invoice;

(c) Buyer becomes insolvent or makes any assignment for the benefit of creditors or a proceeding is initiated against Buyer alleging that Buyer is insolvent or is unable to pay Buyer's debts as they mature.

(d) The issuance of an attachment or garnishment or the filing of a lien against any of the goods subject hereof; or

(e) FMF shall deem itself insecure and Buyer fails to provide FMF with adequate assurance of Buyer's ability to perform.

10) Remedies. FMF shall be entitled to all the remedies of a secured party and seller under the Utah Uniform Commercial Code. Additionally, FMF shall be authorized and Buyer hereby grants FMF permission to enter upon any premises, leased or owned by Buyer, to recover possession of any goods received by Buyer from FMF for which FMF has not received payment.

11) Limited Warranty.

(a) FMF warrants to Buyer that for the period specified in the specifications after the date of invoice of the products ("**Warranty Period**"), that such products will materially conform to the published specifications in effect as of the date of manufacture and will be free from material defects in material and workmanship. This Warranty Period applies only to the original Buyer only and is non-transferable. This Warranty Period may be terminated via misuse, abuse, or improper service, service by a non-certified FMF technician or installer, including moving the product, improper storage, storing the product on its side, or placing the product in a high-humidity environment including spa areas, pool areas, or outside.

(b) **EXCEPT FOR THE WARRANTY SET FORTH IN SECTION 1(A), FMF MAKES NO WARRANTY WHATSOEVER WITH RESPECT TO THE PRODUCTS, INCLUDING ANY (a) WARRANTY OF MERCHANTABILITY; OR (b) WARRANTY OF FITNESS FOR A PARTICULAR PURPOSE; OR (c) WARRANTY OF TITLE; OR (d) WARRANTY AGAINST INFRINGEMENT OF INTELLECTUAL PROPERTY RIGHTS OF A THIRD PARTY; WHETHER EXPRESS OR IMPLIED BY LAW, COURSE OF DEALING, COURSE OF PERFORMANCE, USAGE OF TRADE OR OTHERWISE.**

(c) Products manufactured by a third party ("**Third Party Product**") may constitute, contain, be contained in, incorporated into, attached to or packaged together with, the products. Third Party Products are not covered by the warranty in Section 1(a). For the avoidance of doubt, **FMF MAKES NO REPRESENTATIONS OR WARRANTIES WITH RESPECT TO ANY THIRD PARTY PRODUCT, INCLUDING ANY (a) WARRANTY OF MERCHANTABILITY; (b) WARRANTY OF FITNESS FOR A PARTICULAR PURPOSE; (c) WARRANTY OF TITLE; OR (d) WARRANTY AGAINST INFRINGEMENT OF INTELLECTUAL PROPERTY RIGHTS OF A THIRD PARTY; WHETHER EXPRESS OR IMPLIED BY LAW, COURSE OF DEALING, COURSE OF PERFORMANCE, USAGE OF TRADE OR OTHERWISE.**

(d) FMF shall not be liable for a breach of the warranty set forth in Section 1(a) unless: (i) Buyer gives written notice of the defect, reasonably described, to FMF within ten days of the time when Buyer discovers or ought to have discovered the defect; (ii) FMF is given a reasonable opportunity after receiving the notice to examine such products and Buyer (if requested to do so by FMF) returns such products to FMF's place of business at FMF's cost for the examination to take place there; and (iii) FMF reasonably verifies Buyer's claim that the products are defective.

(e) FMF shall not be liable for a breach of the warranty set forth in Section 1(a) if: (i) Buyer makes any further use of such products after giving such notice; (ii) the defect arises because Buyer failed to follow FMF's oral or written instructions as to the storage, installation, commissioning, use or maintenance of the products; or (iii) Buyer alters or repairs such products without the prior written consent of FMF.

(f) Subject to Section 1(d) and Section 1(e) above, with respect to any such products during the Warranty Period, FMF shall, in its sole discretion, either: (i) repair or replace such products (or the defective part) or (ii) credit or refund the price of such products at the pro rata contract rate provided that, if FMF so requests, Buyer shall, at FMF's expense, return such products to FMF.

(g) **THE REMEDIES SET FORTH IN SECTION 1(F) SHALL BE THE BUYER'S SOLE AND EXCLUSIVE REMEDY AND FMF'S ENTIRE LIABILITY FOR ANY BREACH OF THE LIMITED WARRANTY SET FORTH IN SECTION 1(A).**

12) Limitation of Liability.

(a) **IN NO EVENT SHALL FMF BE LIABLE TO BUYER OR ANY THIRD PARTY FOR ANY LOSS OF USE, REVENUE OR PROFIT OR LOSS OF DATA OR DIMINUTION IN VALUE, OR FOR ANY CONSEQUENTIAL, INDIRECT, INCIDENTAL, SPECIAL, EXEMPLARY, OR PUNITIVE DAMAGES WHETHER ARISING OUT OF BREACH OF CONTRACT, TORT (INCLUDING NEGLIGENCE) OR OTHERWISE, REGARDLESS OF WHETHER SUCH DAMAGES WERE FORESEEABLE AND WHETHER OR NOT FMF HAS BEEN ADVISED OF THE POSSIBILITY OF SUCH DAMAGES, AND NOTWITHSTANDING THE FAILURE OF ANY AGREED OR OTHER REMEDY OF ITS ESSENTIAL PURPOSE.**

(b) **IN NO EVENT SHALL FMF'S AGGREGATE LIABILITY ARISING OUT OF OR RELATED TO THIS AGREEMENT, WHETHER ARISING OUT OF OR RELATED TO BREACH OF CONTRACT, TORT (INCLUDING NEGLIGENCE) OR OTHERWISE, EXCEED ONE TIMES THE TOTAL OF THE AMOUNTS PAID TO FMF FOR THE PRODUCTS SOLD HEREUNDER or $100,000.000, WHICHEVER IS LESS.**

(c) The limitation of liability set forth in Section 2(b) above shall not apply to (i) liability resulting from FMF's gross negligence or willful misconduct and (ii) death or bodily injury resulting from FMF's acts or omissions.

13) Shortages. When in the opinion of FMF there is a period of shortages of supply or transportation for any reason, FMF may allocate its available supply among any and all of its various customers upon such basis as it shall deem fair and practical, with no liability on its part for failure to deliver the quantity or any portion therein specified.

14) Attorney's Fees and Costs of Collection. In the event Buyer fails to pay the invoice amount within the time specified or materially breaches any other provision of this invoice, Buyer shall be liable to pay all reasonable attorney's fees, court costs and other related collection costs and expenses incurred by FMF prosecuting its rights hereunder.

15) Governing Law and Jurisdiction. This invoice, and all other matters relation hereto, including any matter or dispute arising out of the sale of the goods subject hereto, shall be interpreted, governed, and enforced according to the laws of the State of Utah, and Buyer hereby consents to the exclusive jurisdiction of the First Judicial District Court in and for Cache County, State of Utah, to resolve any such disputes.

16) Amendments. This invoice may be amended at any time upon agreement of the parties hereto, which amendment(s) must be reduced to writing and signed by all parties in order to become effective. No waiver by FMF of any default or provision hereof shall be deemed a waiver of any other default or provision.

17) Taxes. All taxes and excises of any nature whatsoever now or hereafter levied by any governmental authority, whether federal, state or local, either directly or indirectly, upon the sale, use or transportation of any goods sold hereunder shall be paid and borne by Buyer.

Quote valid until date listed above. Please sign and return to the contact listed above to place your order.
The FreeMotion Cable Cross, Chest & Shoulder are ADA compliant/wheelchair accessible. A maximum tax credit of $5,000 per year may be applicable. Reference Section 44 of the IRS tax code.

SECTION VII

SECTION B

SECTION 1

Randal Park
Community Development District

Check Run Summary

April 1, 2022 thru April 30, 2022

Fund	Date	Check No.'s	Amount
General Fund	4/5/22	2445 - 2449	$1,604.45
	4/8/22	2450	$3,135.00
	4/13/22	2451 - 2456	$18,326.29
	4/20/22	2457 - 2469	$127,554.20
	4/27/22	2470 - 2473	$5,255.50
	4/29/22	2474	$250.00
			$156,125.44

*** CHECK DATES 04/01/2022 - 04/30/2022 ***
RANDAL PARK CDD
BANK A RANDAL PARK CDD

CHECK DATE	VEND#	.....INVOICE..... DATE	INVOICE	...EXPENSED TO... YRMO	DPT ACCT# SUB SUBCLASS	VENDOR NAME	STATUS	AMOUNT	....CHECK..... AMOUNT	#
4/29/22	00132	8/26/21	08262021	202204	300-36900-10200		V	250.00-		
			PRIVATE PARTY-CANCELLED							
						ALFRED BELLITTI			250.00-	002270
4/05/22	00125	4/01/22	04012022	202204	300-15500-10000		*	400.00		
			SPECIAL EVENT - 4 OF JULY							
						BAND SOURCE PRODUCTIONS			400.00	002445
4/05/22	00128	4/03/22	I-040322	202204	320-53800-47600		*	549.50		
			SECURITY SVC 03/27-04/01							
						ORLANDO POLICE DEPT.			549.50	002446
4/05/22	00146	3/30/22	2222	202203	320-53800-46000		*	750.00		
			RPLC.TONGE/GROOVE SOFFIT							
						PRECISION PAINT AND CONSTRUCTION			750.00	002447
4/05/22	00049	4/01/22	217882	202204	320-53800-34500		*	34.95		
			SECURITY MONITORING-APR22							
						SYNERGY FL			34.95	002448
4/05/22	00136	4/01/22	W5368	202204	320-53800-34500		*	120.00		
			SECURITY MONITORING-APR22							
						WI-PAK			120.00	002449
4/08/22	00048	2/08/22	45324	202202	300-13100-10100		*	3,135.00		
			RMV.SOLAR FIXTR.FROM POLE							
						TERRY'S ELECTRIC INCORPORATED			3,135.00	002450
4/13/22	00057	12/06/18	9827921	202204	320-53800-46000		*	573.00		
			ADD FREON + DYE TO SYSTEM							
		6/20/21	43688150	202204	320-53800-46100		*	95.00		
			MAINTENANCE OF A/C UNITS							
		4/06/22	55938496	202204	320-53800-46000		*	489.34		
			MAINTENANCE OF A/C UNITS							
		4/11/22	56454098	202204	320-53800-46000		*	1,058.28		
			INST.DYE PACK+REFRIGERANT							
						FRANK'S AIR CONDITIONING, INC.			2,215.62	002451
4/13/22	00148	4/06/22	GG-04072	202204	320-53800-49400		*	371.25		
			LADIES NIGHT EVENT 4/7/22							
						GOURMET GRATIS			371.25	002452
4/13/22	00001	4/01/22	683	202204	320-53800-12000		*	1,492.67		
			FIELD MANAGEMENT - APR 22							
		4/01/22	684	202204	320-53800-12100		*	6,620.08		
			AMENITY MANAGEMENT-APR 22							

*** CHECK DATES 04/01/2022 - 04/30/2022 *** RANDAL PARK CDD
BANK A RANDAL PARK CDD

CHECK DATE	VEND#	.....INVOICE..... DATE	INVOICE	...EXPENSED TO... YRMO	DPT ACCT# SUB SUBCLASS	VENDOR NAME	STATUS	AMOUNT	....CHECK..... AMOUNT	#
		4/01/22	685	202204	320-53800-12300		*	2,426.67		
			FACILITY MAINT - APR 22							
						GOVERNMENTAL MANAGEMENT SERVICES			10,539.42	002453
4/13/22	00147	4/12/22	04122022	202204	300-36900-10200		*	250.00		
			DEPOSIT RETURN PAID W.M/O							
						KYAIRA OVER			250.00	002454
4/13/22	00061	4/11/22	138531	202204	320-53800-51000		*	450.00		
			LITTER PICKUP BAGS							
						PROPET DISTRIBUTORS, INC.			450.00	002455
4/13/22	00035	3/01/22	2070129	202203	310-51300-32300		*	4,500.00		
			TRUSTEE FEE SERIES 2015							
						WELLS FARGO BANK			4,500.00	002456
4/20/22	00031	3/31/22	201561	202203	320-53800-47000		*	285.00		
			LAKE MAINT 5 PDS - MAR 22							
		3/31/22	201561	202203	320-53800-47000		*	55.00		
			LAKE MAINT DOWDEN-MAR 22							
		3/31/22	201561	202203	320-53800-47000		*	50.00		
			MAINT AC1 RETENT - MAR 22							
		3/31/22	201561	202203	320-53800-47000		*	95.00		
			MAINT AC2 RETENT - MAR 22							
		3/31/22	201561	202203	320-53800-47000		*	355.00		
			MAINT 4 RET PONDS-MAR 22							
						APPLIED AQUATIC MANAGMENT,INC.			840.00	002457
4/20/22	00060	3/31/22	S235464	202203	320-53800-46000		*	196.00		
			FIX SENSOR/WEATHER STRPNG							
						ACCESS CONTROL TECHNOLOGIES			196.00	002458
4/20/22	00001	4/01/22	682	202204	310-51300-34000		*	3,482.67		
			MANAGEMENT FEES - APR 22							
		4/01/22	682	202204	310-51300-35200		*	100.00		
			WEBSITE MANAGEMENT-APR 22							
		4/01/22	682	202204	310-51300-35100		*	116.67		
			INFORMATION TECH - APR 22							
		4/01/22	682	202204	310-51300-31300		*	875.00		
			DISSEMINATION SVCS-APR 22							
		4/01/22	682	202204	310-51300-51000		*	.66		
			OFFICE SUPPLIES							
		4/01/22	682	202204	310-51300-42000		*	58.49		
			POSTAGE							
		4/01/22	682	202204	310-51300-42500		*	61.50		
			COPIES							

CHECK DATE	VEND#	.....INVOICE..... DATE	INVOICE	...EXPENSED TO... YRMO	DPT ACCT# SUB	SUBCLASS	VENDOR NAME	STATUS	AMOUNT	....CHECK..... AMOUNT	#
		4/01/22	682	202204	320-53800-49400			*	1,213.53		
			H.LOBBY/AMAZN/PBLX/F.MART								
		4/01/22	682	202204	310-51300-51000			*	219.11		
			AMAZON / SAMS CLUB								
		4/01/22	682	202204	310-51300-49000			*	14.20		
			GOING POSTAL - PERMIT								
		4/01/22	682	202204	310-51300-48000			*	49.50		
			ORLANDO SENTINEL								
							GOVERNMENTAL MANAGEMENT SERVICES			6,191.33	002459
4/20/22	00025	4/13/22	28839	202203	310-51300-31500			*	1,394.32		
			RVW AGDA/PREP ATTND MTG								
							LATHAM, LUNA, EDEN & BEAUDINE LLP			1,394.32	002460
4/20/22	00128	4/18/22	I-041822	202204	320-53800-47600			*	755.50		
			SECURITY SVC 04/10-04/16								
							ORLANDO POLICE DEPT.			755.50	002461
4/20/22	00039	4/01/22	7274	202204	320-53800-46400			*	600.00		
			POOL MAINTENANCE - APR 22								
		4/01/22	7275	202204	320-53800-46900			*	150.00		
			FOUNTAIN MAINT - APR 22								
							ROBERTS POOL SERVICE AND REPAIR INC			750.00	002462
4/20/22	00108	4/01/22	39539	202204	320-53800-46700			*	1,230.00		
			JANITORIAL SERVICE-APR 22								
		4/01/22	39539	202204	320-53800-46700			*	138.96		
			JANITORIAL MATERIALS								
							RUGBY COMMERCIAL CLEANING, LLC			1,368.96	002463
4/20/22	00038	2/18/22	379571	202202	320-53800-46400			*	750.00		
			CHEMICALS/CONTROL-MAR 22								
		3/10/22	381268	202203	320-53800-46300			*	538.90		
			INST.VALVE/AUTOFILL BASIN								
		3/18/22	380796	202203	300-15500-10000			*	750.00		
			CHEMICALS/CONTROL-APR 22								
		4/06/22	381829	202204	320-53800-46300			*	332.00		
			AQUACREEK REMOTE/DELIVERY								
							SPIES POOL, LLC			2,370.90	002464
4/20/22	00048	3/24/22	46200	202203	320-53800-46000			*	2,734.00		
			FRNSH/INST NEW TRANSFORMR								
		4/12/22	46654	202204	320-53800-46000			*	245.00		
			RPLC PHOTO CELL								
							TERRY'S ELECTRIC INCORPORATED			2,979.00	002465

*** CHECK DATES 04/01/2022 - 04/30/2022 ***
RANDAL PARK CDD
BANK A RANDAL PARK CDD

CHECK DATE	VEND#	.....INVOICE..... DATE	INVOICE	...EXPENSED TO... YRMO	DPT ACCT# SUB SUBCLASS	VENDOR NAME	STATUS	AMOUNT	....CHECK..... AMOUNT	#
4/20/22	00066	3/15/22	ON 34047	202203	320-53800-46200		*	24,012.91		
			LANDSCAPE MAINT - MAR 22							
		4/15/22	ON 35322	202204	320-53800-46200		*	24,012.91		
			LANDSCAPE MAINT - APR 22							
						YELLOWSTONE LANDSCAPE-SOUTHEAST,LLC			48,025.82	002466
4/20/22	00033	4/20/22	04202022	202204	300-20700-10300		*	22,716.79		
			ASSESSMENT TXFER - S2012							
						RANDAL PARK CDD C/O WELLS FARGO			22,716.79	002467
4/20/22	00110	4/20/22	04202022	202204	300-20700-10300		*	33,285.52		
			ASSESSMENT TXFER - S2015							
						RANDAL PARK CDD C/O WELLS FARGO			33,285.52	002468
4/20/22	00111	4/20/22	04202022	202204	300-20700-10300		*	6,680.06		
			ASSESSMENT TXFER - S2018							
						RANDAL PARK CDD C/O WELLS FARGO			6,680.06	002469
4/27/22	00142	4/21/22	127611	202204	300-13100-10100		*	3,690.00		
			DOG PARK FENCE - BAL.DUE							
						AMERICAN ALL SECURE GATES & FENCE			3,690.00	002470
4/27/22	00149	3/25/22	0006	202203	320-53800-49400		*	60.00		
			SKINNY HOUR EVENT							
						FITMIND NUTRITION LLC			60.00	002471
4/27/22	00128	4/24/22	I-042422	202204	320-53800-47600		*	755.50		
			SECURITY SVC 04/17-04/23							
						ORLANDO POLICE DEPT.			755.50	002472
4/27/22	00038	4/18/22	382258	202204	300-15500-10000		*	750.00		
			CHEMICALS/CONTROL-MAY 22							
						SPIES POOL, LLC			750.00	002473
4/29/22	00132	4/12/22	04122022	202204	300-36900-10200		*	250.00		
			PRIVATE PARTY CANCELLED							
						ALFRED BELLITTI			250.00	002474

TOTAL FOR BANK A 156,125.44

TOTAL FOR REGISTER 156,125.44

SECTION 2

Randal Park

Community Development District

Unaudited Financial Reporting

April 30, 2022

Table of Contents

Randal Park

Community Development District

Combined Balance Sheet

April 30, 2022

	General Fund	*Capital Reserve Fund*	*Debt Service Fund*	*Capital Projects Fund*	*Totals Governmental Funds*
Assets:					
Cash:					
Operating Account	$ 892,644	$ -	$ -	$ -	$ 892,644
Debit Card	$ 2,479	$ -	$ -	$ -	$ 2,479
Investments:					
State Board Administration	$ -	$ 328,445	$ -	$ -	$ 328,445
Series 2012					
Reserve	$ -	$ -	$ 401,052	$ -	$ 401,052
Revenue	$ -	$ -	$ 381,082	$ -	$ 381,082
Interest	$ -	$ -	$ 144,269	$ -	$ 144,269
Prepayment	$ -	$ -	$ 0	$ -	$ 0
Sinking Fund	$ -	$ -	$ 17	$ -	$ 17
Series 2015					
Reserve	$ -	$ -	$ 596,111	$ -	$ 596,111
Revenue	$ -	$ -	$ 496,291	$ -	$ 496,291
Interest	$ -	$ -	$ 202,988	$ -	$ 202,988
Prepayment	$ -	$ -	$ 1,877	$ -	$ 1,877
Construction	$ -	$ -	$ -	$ 437	$ 437
Series 2018					
Reserve	$ -	$ -	$ 58,840	$ -	$ 58,840
Revenue	$ -	$ -	$ 50,611	$ -	$ 50,611
Interest	$ -	$ -	$ 42,913	$ -	$ 42,913
Principal	$ -	$ -	$ 30,000	$ -	$ 30,000
Capital Interest	$ -	$ -	$ 2,539	$ -	$ 2,539
Construction	$ -	$ -	$ -	$ 48	$ 48
Cost of Issuance	$ -	$ -	$ -	$ 7	$ 7
Due from Colonial Properties	$ 7,922	$ -	$ -	$ -	$ 7,922
Due from Capital Reserve	$ 10,515	$ -	$ -	$ -	$ 10,515
Prepaid Expenses	$ 1,150	$ -	$ -	$ -	$ 1,150
Total Assets	**$ 914,711**	**$ 328,445**	**$ 2,408,590**	**$ 491**	**$ 3,652,238**
Liabilities:					
Accounts Payable	$ 6,351	$ -	$ -	$ -	$ 6,351
Due to General Fund	$ -	$ 10,515	$ -	$ -	$ 10,515
Total Liabilites	**$ 6,351**	**$ 10,515**	**$ -**	**$ -**	**$ 16,866**
Fund Balance:					
Assigned for:					
Capital Reserves	$ -	$ 317,930	$ -	$ -	$ 317,930
Nonspendable:					
Deposits and Prepaid Items	$ 1,150	$ -	$ -	$ -	$ 1,150
Restricted for:					
Debt Service 2012	$ -	$ -	$ 926,420	$ -	$ 926,420
Debt Service 2015	$ -	$ -	$ 1,297,268	$ -	$ 1,297,268
Debt Service 2018	$ -	$ -	$ 184,903	$ -	$ 184,903
Capital Projects - Series 2012	$ -	$ -	$ -	$ -	$ -
Capital Projects - Series 2015	$ -	$ -	$ -	$ 437	$ 437
Capital Projects - Series 2018	$ -	$ -	$ -	$ 55	$ 55
Unassigned	$ 907,210	$ -	$ -	$ -	$ 907,210
Total Fund Balances	**$ 908,360**	**$ 317,930**	**$ 2,408,590**	**$ 491**	**$ 3,635,372**
Total Liabilities & Fund Balance	$ 914,711	$ 328,445	$ 2,408,590	$ 491	$ 3,652,238

Randal Park

Community Development District

General Fund

Statement of Revenues, Expenditures, and Changes in Fund Balance

For The Period Ending April 30, 2022

	Adopted Budget	Prorated Budget Thru 04/30/22	Actual Thru 04/30/22	Variance
Revenues:				
Special Assessments	$ 963,338	$ 953,080	$ 953,080	$ -
Colonial Properties Contribution	$ 46,332	$ 27,027	$ 27,715	$ 688
Miscellaneous Revenue	$ 1,000	$ 583	$ 670	$ 87
Activities	$ 7,000	$ 1,556	$ 1,556	$ -
Rentals	$ 7,000	$ 7,000	$ 11,250	$ 4,250
Total Revenues	**$ 1,024,670**	**$ 989,246**	**$ 994,271**	**$ 5,025**
Expenditures:				
General & Administrative:				
Supervisor Fees	$ 12,000	$ 7,000	$ 5,000	$ 2,000
FICA Expense	$ 900	$ 525	$ 383	$ 143
Annual Audit	$ 4,400	$ 4,400	$ 4,400	$ -
Trustee Fees	$ 12,500	$ 8,500	$ 8,500	$ -
Dissemination Agent	$ 10,500	$ 6,125	$ 6,125	$ -
Arbitrage	$ 1,800	$ -	$ -	$ -
Engineering	$ 10,000	$ 5,833	$ 190	$ 5,643
Attorney	$ 20,000	$ 11,667	$ 7,409	$ 4,258
Assessment Administration	$ 5,000	$ 5,000	$ 5,000	$ -
Management Fees	$ 41,792	$ 24,379	$ 24,379	$ 0
Information Technology	$ 1,400	$ 817	$ 817	$ (0)
Website Maintenance	$ 1,200	$ 700	$ 700	$ -
Telephone	$ 100	$ 58	$ -	$ 58
Postage	$ 650	$ 379	$ 252	$ 127
Insurance	$ 5,834	$ 5,834	$ 5,490	$ 344
Printing & Binding	$ 2,150	$ 1,254	$ 353	$ 902
Legal Advertising	$ 2,250	$ 1,313	$ 646	$ 666
Other Current Charges	$ 1,700	$ 992	$ 347	$ 644
Office Supplies	$ 200	$ 117	$ 224	$ (108)
Property Appraiser	$ 800	$ 800	$ -	$ 800
Property Taxes	$ 250	$ 250	$ 286	$ (36)
Dues, Licenses & Subscriptions	$ 175	$ 175	$ 175	$ -
Subtotal General & Administrative	**$ 135,601**	**$ 86,117**	**$ 70,675**	**$ 15,442**
Operations & Maintenance				
Contract Services:				
Field Management	$ 17,912	$ 10,449	$ 10,449	$ (0)
Wetland Maintenance	$ 9,600	$ 5,600	$ -	$ 5,600
Mitigation Monitoring	$ 2,500	$ 2,500	$ 9,600	$ (7,100)
Landscape Maintenance	$ 288,264	$ 168,154	$ 168,090	$ 64
Lake Maintenance	$ 9,600	$ 5,600	$ 5,040	$ 560
Security Patrol	$ 36,400	$ 21,233	$ 12,470	$ 8,764
Repairs & Maintenance				
Facility Maintenance	$ 29,120	$ 16,987	$ 16,987	$ (0)
Repairs & Maintenance	$ 11,000	$ 11,000	$ 11,484	$ (484)
Operating Supplies	$ 9,800	$ 5,717	$ 3,175	$ 2,542
Landscape Replacement	$ 10,500	$ 10,063	$ 10,063	$ -
Irrigation Repairs	$ 10,000	$ 5,833	$ 1,198	$ 4,636
Alley Maintenance	$ 1,500	$ 875	$ -	$ 875
Stormwater Repairs & Maintenance	$ 1,500	$ 875	$ -	$ 875
Fountain Maintenance	$ 3,500	$ 2,042	$ 1,370	$ 672
Sign Maintenance	$ 1,000	$ 583	$ 199	$ 384
Pressure Washing	$ 5,700	$ 5,700	$ 8,350	$ (2,650)

Randal Park

Community Development District

General Fund

Statement of Revenues, Expenditures, and Changes in Fund Balance

For The Period Ending April 30, 2022

	Adopted Budget	Prorated Budget Thru 04/30/22	Actual Thru 04/30/22	Variance
Utilities				
Utilities - Common Area	$ 30,000	$ 17,500	$ 10,920	$ 6,580
Streetlighting	$ 110,000	$ 64,167	$ 59,389	$ 4,778
Amenity Center				
Amenity Management	$ 79,441	$ 46,341	$ 46,341	$ 0
Pool Attendants	$ 15,600	$ 1,256	$ 1,256	$ -
Pool Permit	$ 550	$ -	$ -	$ -
Cable TV/Internet/Telephone	$ 4,000	$ 2,333	$ 2,016	$ 317
Utilities - Amenity Center	$ 21,000	$ 12,250	$ 8,819	$ 3,431
Refuse Service	$ 2,400	$ 1,400	$ 1,497	$ (97)
Amenity Center Access Cards	$ 1,000	$ 583	$ -	$ 583
HVAC Maintenance	$ 574	$ 335	$ 95	$ 240
Special Events	$ 13,962	$ 13,239	$ 13,239	$ -
Holiday Decorations	$ 4,410	$ 4,410	$ 8,179	$ (3,769)
Security Monitoring	$ 600	$ 600	$ 2,567	$ (1,967)
Janitorial Services	$ 16,000	$ 11,037	$ 11,037	$ -
Pool Maintenance	$ 15,330	$ 8,943	$ 9,378	$ (436)
Pool Repairs & Maintenance	$ 3,200	$ 1,867	$ 1,809	$ 58
Fitness Repairs & Maintenance	$ 5,000	$ 2,917	$ 1,681	$ 1,235
Amenity Repairs & Maintenance	$ 1,480	$ 863	$ -	$ 863
Pest Control	$ 650	$ 379	$ 300	$ 79
Other				
Property Insurance	$ 36,925	$ 36,925	$ 34,743	$ 2,182
Contingency	$ 4,625	$ 4,625	$ 4,931	$ (306)
Subtotal Operations & Maintenance	**$ 814,643**	**$ 505,180**	**$ 476,672**	**$ 28,508**
Total Expenditures	**$ 950,244**	**$ 591,297**	**$ 547,347**	**$ 43,950**
Excess (Deficiency) of Revenues over Expenditures	$ 74,426		$ 446,924	
Other Financing Sources/(Uses):				
Transfer In/(Out) - Capital Reserve	$ (74,426)	$ -	$ -	$ -
Total Other Financing Sources/(Uses)	**$ (74,426)**	**$ -**	**$ -**	**$ -**
Net Change in Fund Balance	**$ -**		**$ 446,924**	
Fund Balance - Beginning	$ -		$ 461,435	
Fund Balance - Ending	$ -		$ 908,360	

Randal Park

Community Development District

Capital Reserve Fund

Statement of Revenues, Expenditures, and Changes in Fund Balance

For The Period Ending April 30, 2022

	Adopted Budget	Prorated Budget Thru 04/30/22	Actual Thru 04/30/22	Variance
Revenues				
Interest	$ 500	$ 403	$ 403	$ -
Total Revenues	**$ 500**	**$ 403**	**$ 403**	**$ -**
Expenditures:				
Capital Outlay	$ 25,000	$ 25,000	$ 29,941	$ (4,941)
Walking Path Repair	$ 75,000	$ -	$ -	$ -
Splash Pad	$ 18,000	$ 18,000	$ 17,062	$ 938
Pergola staining/repairs	$ 10,000	$ -	$ -	$ -
Painting Parking lot fencing	$ 3,500	$ -	$ -	$ -
Fountain	$ 20,000	$ 4,584	$ 4,584	$ -
Total Expenditures	**$ 151,500**	**$ 47,584**	**$ 51,587**	**$ (4,003)**
Excess (Deficiency) of Revenues over Expenditures	**$ (151,000)**		**$ (51,184)**	
Other Financing Sources/(Uses)				
Transfer In/(Out)	$ 74,426	$ -	$ -	$ -
Total Other Financing Sources (Uses)	**$ 74,426**	**$ -**	**$ -**	**$ -**
Net Change in Fund Balance	**$ (76,574)**		**$ (51,184)**	
Fund Balance - Beginning	**$ 377,198**		**$ 369,114**	
Fund Balance - Ending	**$ 300,624**		**$ 317,930**	

Randal Park

Community Development District

Debt Service Fund Series 2012

Statement of Revenues, Expenditures, and Changes in Fund Balance

For The Period Ending April 30, 2022

	Adopted Budget	Prorated Budget Thru 04/30/22	Actual Thru 04/30/22	Variance
Revenues:				
Assessments	$ 397,350	$ 395,927	$ 395,927	$ -
Interest	$ 100	$ 58	$ 81	$ 23
Total Revenues	**$ 397,450**	**$ 395,985**	**$ 396,008**	**$ 23**
Expenditures:				
Principal Payment - 11/01	$ 90,000	$ 90,000	$ 90,000	$ -
Interest Payment - 11/01	$ 146,856	$ 146,856	$ 146,856	$ -
Interest Payment - 05/01	$ 144,269	$ -	$ -	$ -
Total Expenditures	**$ 381,125**	**$ 236,856**	**$ 236,856**	**$ -**
Excess (Deficiency) of Revenues over Expenditures	$ 16,325		$ 159,152	
Fund Balance - Beginning	$ 361,874		$ 767,268	
Fund Balance - Ending	$ 378,199		$ 926,420	

Randal Park

Community Development District

Debt Service Fund Series 2015

Statement of Revenues, Expenditures, and Changes in Fund Balance

For The Period Ending April 30, 2022

	Adopted Budget	Prorated Budget Thru 04/30/22	Actual Thru 04/30/22	Variance
Revenues:				
Assessments	$ 596,080	$ 580,127	$ 580,127	$ -
Interest	$ 125	$ 73	$ 113	$ 40
Total Revenues	**$ 596,205**	**$ 580,200**	**$ 580,241**	**$ 40**
Expenditures:				
Principal Payment - 11/01	$ 170,000	$ 170,000	$ 170,000	$ -
Interest Payment - 11/01	$ 206,803	$ 206,803	$ 206,696	$ 106
Special Call - 02/01	$ -	$ -	$ 5,000	$ (5,000)
Interest Payment - 02/01	$ -	$ -	$ 53	$ (53)
Interest Payment - 05/01	$ 203,190	$ -	$ -	$ -
Total Expenditures	**$ 579,993**	**$ 376,803**	**$ 381,749**	**$ (4,947)**
Excess (Deficiency) of Revenues over Expenditures	$ 16,213		$ 198,491	
Fund Balance - Beginning	$ 491,475		$ 1,098,776	
Fund Balance - Ending	$ 507,687		$ 1,297,268	

Randal Park

Community Development District

Debt Service Fund Series 2018

Statement of Revenues, Expenditures, and Changes in Fund Balance

For The Period Ending April 30, 2022

	Adopted Budget	Prorated Budget Thru 04/30/22	Actual Thru 04/30/22	Variance
Revenues:				
Assessments	$ 117,674	$ 116,425	$ 116,425	$ -
Interest	$ 50	$ 29	$ 14	$ (15)
Total Revenues	**$ 117,724**	**$ 116,455**	**$ 116,440**	**$ (15)**
Expenditures:				
Interest Payment - 11/01	$ 42,913	$ 42,913	$ 42,913	$ -
Principal Payment - 05/01	$ 30,000	$ -	$ -	$ -
Interest Payment - 05/01	$ 42,913	$ -	$ -	$ -
Total Expenditures	**$ 115,825**	**$ 42,913**	**$ 42,913**	**$ -**
Excess (Deficiency) of Revenues over Expenditures	$ 1,899		$ 73,527	
Fund Balance - Beginning	$ 51,236		$ 111,376	
Fund Balance - Ending	$ 53,135		$ 184,903	

Randal Park

Community Development District

Combined Capital Project Funds

Statement of Revenues, Expenditures, and Changes in Fund Balance

For The Period Ending April 30, 2022

	Series 2015	Series 2018	Total
Revenues			
Interest	$ 0	$ -	$ 0
Total Revenues	**$ 0**	**$ -**	**$ 0**
Expenditures:			
Capital Outlay	$ -	$ -	$ -
Total Expenditures	**$ -**	**$ -**	**$ -**
Excess (Deficiency) of Revenues over Expenditures	**$ 0**	**$ -**	**$ 0**
Fund Balance - Beginning	**$ 437**	**$ 55**	**$ 491**
Fund Balance - Ending	**$ 437**	**$ 55**	**$ 491**

Randal Park

Community Development District

Month to Month

	Oct	Nov	Dec	Jan	Feb	March	April	May	June	July	Aug	Sept	Total
Revenues:													
Special Assessments	$ -	$ 59,368	$ 187,780	$ 565,609	$ 105,020	$ 16,739	$ 18,563	$ -	$ -	$ -	$ -	$ -	$ 953,080
Colonial Properties Contribution	$ 4,003	$ 3,911	$ 3,916	$ 4,003	$ 3,960	$ 3,980	$ 3,942	$ -	$ -	$ -	$ -	$ -	$ 27,715
Miscellaneous Revenue	$ 110	$ 250	$ 35	$ 45	$ 45	$ 160	$ 25	$ -	$ -	$ -	$ -	$ -	$ 670
Activities	$ -	$ -	$ -	$ -	$ 690	$ 387	$ 479	$ -	$ -	$ -	$ -	$ -	$ 1,556
Rentals	$ 1,500	$ -	$ 1,500	$ 2,250	$ 1,500	$ 4,000	$ 500	$ -	$ -	$ -	$ -	$ -	$ 11,250
Total Revenues	**$ 5,613**	**$ 63,529**	**$ 193,231**	**$ 571,908**	**$ 111,215**	**$ 25,266**	**$ 23,509**	**$ -**	**$ -**	**$ -**	**$ -**	**$ -**	**$ 994,271**
Expenditures:													
General & Administrative:													
Supervisor Fees	$ 600	$ 800	$ 800	$ 800	$ 600	$ 600	$ 800	$ -	$ -	$ -	$ -	$ -	$ 5,000
FICA Expense	$ 46	$ 61	$ 61	$ 61	$ 46	$ 46	$ 61	$ -	$ -	$ -	$ -	$ -	$ 383
Annual Audit	$ -	$ -	$ -	$ -	$ 4,400	$ -	$ -	$ -	$ -	$ -	$ -	$ -	$ 4,400
Trustee Fees	$ -	$ -	$ 4,000	$ -	$ -	$ 4,500	$ -	$ -	$ -	$ -	$ -	$ -	$ 8,500
Dissemination Agent	$ 875	$ 875	$ 875	$ 875	$ 875	$ 875	$ 875	$ -	$ -	$ -	$ -	$ -	$ 6,125
Arbitrage	$ -	$ -	$ -	$ -	$ -	$ -	$ -	$ -	$ -	$ -	$ -	$ -	$ -
Engineering	$ -	$ 190	$ -	$ -	$ -	$ -	$ -	$ -	$ -	$ -	$ -	$ -	$ 190
Attorney	$ 1,138	$ 1,477	$ 799	$ 1,254	$ 1,345	$ 1,394	$ -	$ -	$ -	$ -	$ -	$ -	$ 7,409
Assessment Administration	$ 5,000	$ -	$ -	$ -	$ -	$ -	$ -	$ -	$ -	$ -	$ -	$ -	$ 5,000
Management Fees	$ 3,483	$ 3,483	$ 3,483	$ 3,483	$ 3,483	$ 3,483	$ 3,483	$ -	$ -	$ -	$ -	$ -	$ 24,379
Information Technology	$ 117	$ 117	$ 117	$ 117	$ 117	$ 117	$ 117	$ -	$ -	$ -	$ -	$ -	$ 817
Website Maintenance	$ 100	$ 100	$ 100	$ 100	$ 100	$ 100	$ 100	$ -	$ -	$ -	$ -	$ -	$ 700
Telephone	$ -	$ -	$ -	$ -	$ -	$ -	$ -	$ -	$ -	$ -	$ -	$ -	$ -
Postage	$ 65	$ 0	$ 17	$ 11	$ 51	$ 50	$ 58	$ -	$ -	$ -	$ -	$ -	$ 252
Insurance	$ 5,490	$ -	$ -	$ -	$ -	$ -	$ -	$ -	$ -	$ -	$ -	$ -	$ 5,490
Printing & Binding	$ 61	$ 64	$ 26	$ 49	$ 44	$ 47	$ 62	$ -	$ -	$ -	$ -	$ -	$ 353
Legal Advertising	$ -	$ -	$ -	$ -	$ -	$ 597	$ 50	$ -	$ -	$ -	$ -	$ -	$ 646
Other Current Charges	$ 44	$ 37	$ 45	$ 48	$ 73	$ 32	$ 69	$ -	$ -	$ -	$ -	$ -	$ 347
Office Supplies	$ 1	$ 0	$ 1	$ 1	$ 1	$ 1	$ 220	$ -	$ -	$ -	$ -	$ -	$ 224
Property Appraiser	$ -	$ -	$ -	$ -	$ -	$ -	$ -	$ -	$ -	$ -	$ -	$ -	$ -
Property Taxes	$ -	$ 38	$ -	$ 248	$ -	$ -	$ -	$ -	$ -	$ -	$ -	$ -	$ 286
Dues, Licenses & Subscriptions	$ 175	$ -	$ -	$ -	$ -	$ -	$ -	$ -	$ -	$ -	$ -	$ -	$ 175
Subtotal General & Administrative	**$ 17,194**	**$ 7,242**	**$ 10,323**	**$ 7,045**	**$ 11,134**	**$ 11,843**	**$ 5,894**	**$ -**	**$ -**	**$ -**	**$ -**	**$ -**	**$ 70,675**
Operations & Maintenance													
Contract Services:													
Field Management	$ 1,493	$ 1,493	$ 1,493	$ 1,493	$ 1,493	$ 1,493	$ 1,493	$ -	$ -	$ -	$ -	$ -	$ 10,449
Wetland Maintenance	$ -	$ -	$ -	$ -	$ -	$ -	$ -	$ -	$ -	$ -	$ -	$ -	$ -
Mitigation Monitoring	$ 4,800	$ -	$ -	$ 4,800	$ -	$ -	$ -	$ -	$ -	$ -	$ -	$ -	$ 9,600
Landscape Maintenance	$ 24,013	$ 24,013	$ 24,013	$ 24,013	$ 24,013	$ 24,013	$ 24,013	$ -	$ -	$ -	$ -	$ -	$ 168,090
Lake Maintenance	$ 840	$ 840	$ 840	$ 840	$ 840	$ 840	$ -	$ -	$ -	$ -	$ -	$ -	$ 5,040
Security Patrol	$ 1,462	$ 1,392	$ -	$ 1,786	$ 2,198	$ 2,816	$ 2,816	$ -	$ -	$ -	$ -	$ -	$ 12,470
Repairs & Maintenance													
Facility Maintenance	$ 2,427	$ 2,427	$ 2,427	$ 2,427	$ 2,427	$ 2,427	$ 2,427	$ -	$ -	$ -	$ -	$ -	$ 16,987
Repairs & Maintenance	$ 3,746	$ 85	$ 835	$ 400	$ 372	$ 3,680	$ 2,366	$ -	$ -	$ -	$ -	$ -	$ 11,484
Operating Supplies	$ 599	$ -	$ 556	$ 602	$ -	$ 968	$ 450	$ -	$ -	$ -	$ -	$ -	$ 3,175
Landscape Replacement	$ -	$ 156	$ 6,253	$ 2,945	$ -	$ 709	$ -	$ -	$ -	$ -	$ -	$ -	$ 10,063
Irrigation Repairs	$ 1,003	$ -	$ -	$ -	$ 195	$ -	$ -	$ -	$ -	$ -	$ -	$ -	$ 1,198
Alley Maintenance	$ -	$ -	$ -	$ -	$ -	$ -	$ -	$ -	$ -	$ -	$ -	$ -	$ -
Stormwater Repairs & Maintenance	$ -	$ -	$ -	$ -	$ -	$ -	$ -	$ -	$ -	$ -	$ -	$ -	$ -
Fountain Maintenance	$ 295	$ 150	$ 325	$ 150	$ 150	$ 150	$ 150	$ -	$ -	$ -	$ -	$ -	$ 1,370
Sign Maintenance	$ -	$ 199	$ -	$ -	$ -	$ -	$ -	$ -	$ -	$ -	$ -	$ -	$ 199
Pressure Washing	$ 8,350	$ -	$ -	$ -	$ -	$ -	$ -	$ -	$ -	$ -	$ -	$ -	$ 8,350

Randal Park

Community Development District

Month to Month

	Oct	Nov	Dec	Jan	Feb	March	April	May	June	July	Aug	Sept	Total
Utilities													
Utilities - Common Area	$ 1,226	$ 1,088	$ 1,827	$ 1,864	$ 1,847	$ 1,479	$ 1,589	$ -	$ -	$ -	$ -	$ -	$ 10,920
Streetlighting	$ 8,466	$ 8,466	$ 8,466	$ 8,466	$ 8,509	$ 8,509	$ 8,509	$ -	$ -	$ -	$ -	$ -	$ 59,389
Amenity Center													
Amenity Management	$ 6,620	$ 6,620	$ 6,620	$ 6,620	$ 6,620	$ 6,620	$ 6,620	$ -	$ -	$ -	$ -	$ -	$ 46,341
Pool Attendants	$ -	$ -	$ -	$ -	$ -	$ -	$ 1,256	$ -	$ -	$ -	$ -	$ -	$ 1,256
Pool Permit	$ -	$ -	$ -	$ -	$ -	$ -	$ -	$ -	$ -	$ -	$ -	$ -	$ -
Cable TV/Internet/Telephone	$ 287	$ 287	$ 287	$ 287	$ 287	$ 291	$ 291	$ -	$ -	$ -	$ -	$ -	$ 2,016
Utilities - Amenity Center	$ 1,721	$ 1,483	$ 1,123	$ 1,177	$ 1,113	$ 1,148	$ 1,055	$ -	$ -	$ -	$ -	$ -	$ 8,819
Refuse Service	$ 206	$ 214	$ 214	$ 214	$ 221	$ 214	$ 214	$ -	$ -	$ -	$ -	$ -	$ 1,497
Amenity Center Access Cards	$ -	$ -	$ -	$ -	$ -	$ -	$ -	$ -	$ -	$ -	$ -	$ -	$ -
HVAC Maintenance	$ -	$ -	$ -	$ -	$ -	$ -	$ 95	$ -	$ -	$ -	$ -	$ -	$ 95
Special Events	$ 1,695	$ 605	$ 7,220	$ -	$ -	$ 623	$ 3,097	$ -	$ -	$ -	$ -	$ -	$ 13,239
Holiday Decorations	$ 8,179	$ -	$ -	$ -	$ -	$ -	$ -	$ -	$ -	$ -	$ -	$ -	$ 8,179
Security Monitoring	$ 927	$ 155	$ 155	$ 865	$ 155	$ 155	$ 155	$ -	$ -	$ -	$ -	$ -	$ 2,567
Janitorial Services	$ 1,532	$ 1,859	$ 1,593	$ 2,031	$ 1,423	$ 1,230	$ 1,369	$ -	$ -	$ -	$ -	$ -	$ 11,037
Pool Maintenance	$ 1,278	$ 1,350	$ 1,350	$ 1,350	$ 1,350	$ 1,350	$ 1,350	$ -	$ -	$ -	$ -	$ -	$ 9,378
Pool Repairs & Maintenance	$ 252	$ 252	$ -	$ 252	$ -	$ 721	$ 332	$ -	$ -	$ -	$ -	$ -	$ 1,809
Fitness Repairs & Maintenance	$ -	$ -	$ 175	$ -	$ 230	$ 1,276	$ -	$ -	$ -	$ -	$ -	$ -	$ 1,681
Amenity Repairs & Maintenance	$ -	$ -	$ -	$ -	$ -	$ -	$ -	$ -	$ -	$ -	$ -	$ -	$ -
Pest Control	$ 50	$ 50	$ 50	$ 50	$ 50	$ 50	$ -	$ -	$ -	$ -	$ -	$ -	$ 300
Other													
Property Insurance	$ 34,743	$ -	$ -	$ -	$ -	$ -	$ -	$ -	$ -	$ -	$ -	$ -	$ 34,743
Contingency	$ -	$ -	$ 1,250	$ 481	$ -	$ -	$ 3,200	$ -	$ -	$ -	$ -	$ -	$ 4,931
Subtotal Operations & Maintenance	**$ 116,209**	**$ 53,182**	**$ 67,070**	**$ 63,112**	**$ 53,492**	**$ 60,761**	**$ 62,846**	**$ -**	**$ -**	**$ -**	**$ -**	**$ -**	**$ 476,672**
Total Expenditures	**$ 133,403**	**$ 60,424**	**$ 77,393**	**$ 70,157**	**$ 64,626**	**$ 72,603**	**$ 68,740**	**$ -**	**$ -**	**$ -**	**$ -**	**$ -**	**$ 547,347**
Excess Revenues (Expenditures)	$ (127,790)	$ 3,105	$ 115,839	$ 501,750	$ 46,589	$ (47,337)	$ (45,231)	$ -	$ -	$ -	$ -	$ -	$ 446,924
Other Financing Sources/Uses:													
Transfer In/(Out) - Capital Reserve	$ -	$ -	$ -	$ -	$ -	$ -	$ -	$ -	$ -	$ -	$ -	$ -	$ -
Total Other Financing Sources/Uses	**$ -**	**$ -**	**$ -**	**$ -**	**$ -**	**$ -**	**$ -**	**$ -**	**$ -**	**$ -**	**$ -**	**$ -**	**$ -**
Net Change in Fund Balance	**$ (127,790)**	**$ 3,105**	**$ 115,839**	**$ 501,750**	**$ 46,589**	**$ (47,337)**	**$ (45,231)**	**$ -**	**$ -**	**$ -**	**$ -**	**$ -**	**$ 446,924**

Randal Park
Community Development District
Long Term Debt Report

Series 2012 Special Assessment Bonds	
Interest Rate :	Various
	(5.75% , 6.125% , 6.875%)
Maturity Date :	11/1/2042
Reserve Fund Requirement :	$397,203
Reserve Fund Balance :	$401,052
Bonds Outstanding - 09/30/2013	$5,115,000
Less : November 1, 2013 (Mandatory)	($65,000)
Less : November 1, 2014 (Mandatory)	($70,000)
Less : November 1, 2015 (Mandatory)	($70,000)
Less : November 1, 2016 (Mandatory)	($75,000)
Less : November 1, 2017 (Mandatory)	($80,000)
Less : November 1, 2018 (Mandatory)	($85,000)
Less : November 1, 2019 (Mandatory)	($90,000)
Less : November 1, 2020 (Mandatory)	($95,000)
Less : November 1, 2020 (Special Call)	($15,000)
Less : August 1, 2021 (Special Call)	($5,000)
Less : November 1, 2021 (Mandatory)	($90,000)
Current Bonds Outstanding	**$4,375,000**

Series 2015 Special Assessment Bonds	
Interest Rate :	Various
	(4.25% , 5% , 5.2%)
Maturity Date :	11/1/2045
Reserve Fund Requirement :	$596,080
Reserve Fund Balance :	$596,111
Bonds Outstanding - 03/18/2015	$9,055,000
Less : November 1, 2016 (Mandatory)	($145,000)
Less : November 1, 2017 (Mandatory)	($150,000)
Less : February 1, 2018 (Special Call)	($15,000)
Less : November 1, 2018 (Mandatory)	($155,000)
Less : November 1, 2018 (Special Call)	($20,000)
Less : February 1, 2019 (Special Call)	($20,000)
Less : August 1, 2019 (Special Call)	($5,000)
Less : November 1, 2019 (Mandatory)	($155,000)
Less : November 1, 2020 (Mandatory)	($165,000)
Less : November 1, 2021 (Mandatory)	($170,000)
Less : February 1, 2022 (Special Call)	($5,000)
Current Bonds Outstanding	**$8,050,000**

Series 2018 Special Assessment Bonds	
Interest Rate :	Various
	(4.100% , 4.500% , 5.050%, 5.200%)
Maturity Date :	11/1/2049
Reserve Fund Requirement :	$58,837
Reserve Fund Balance :	$58,840
Bonds Outstanding - 12/17/2018	$1,770,000
Less : May 1, 2020 (Mandatory)	($30,000)
Less : May 1, 2021 (Mandatory)	($30,000)
Current Bonds Outstanding	**$1,710,000**

Randal Park

COMMUNITY DEVELOPMENT DISTRICT

Assessment Receipt Schedule

Fiscal Year 2022

						Gross Assessments	$ 1,024,828.80	$ 425,732.67	$ 623,799.93	$ 125,190.00	$ 2,199,551.40
						Net Assessments	$ 963,339.07	$ 400,188.71	$ 586,371.93	$ 117,678.60	$ 2,067,578.32
				ON ROLL ASSESSMENTS							
							46.59%	19.36%	28.36%	5.69%	100.00%
Date	*Distribution*	*Gross Amount*	*Commissions*	*Discount/Penalty*	*Interest*	*Net Receipts*	*O&M Portion*	*Series 2012 Debt Service*	*Series 2015 Debt Service*	*Series 2018 Debt Service*	*Total*
11/8/21	1	$5,052.95	$0.00	($265.29)	$0.00	$4,787.66	$2,230.69	$926.67	$1,357.80	$272.50	$4,787.66
11/15/21	2	$45,413.12	$0.00	($1,816.54)	$0.00	$43,596.58	$20,312.79	$8,438.31	$12,364.13	$2,481.35	$43,596.58
11/22/21	3	$82,329.13	$0.00	($3,293.19)	$0.00	$79,035.94	$36,824.92	$15,297.75	$22,414.85	$4,498.42	$79,035.94
12/06/21	4	$141,596.03	$0.00	($5,663.73)	$0.00	$135,932.30	$63,334.44	$26,310.28	$38,550.84	$7,736.74	$135,932.30
12/13/21	5	$222,025.43	$0.00	($8,881.10)	$0.00	$213,144.33	$99,309.54	$41,255.01	$60,448.43	$12,131.35	$213,144.33
12/20/21	6	$56,168.09	$0.00	($2,246.78)	$27.46	$53,948.77	$25,136.14	$10,442.02	$15,300.05	$3,070.56	$53,948.77
01/14/22	7	$1,264,527.48	$0.00	($50,581.51)	$0.00	$1,213,945.97	$565,609.33	$234,964.49	$344,279.02	$69,093.13	$1,213,945.97
02/14/22	8	$191,460.26	$0.00	($7,658.48)	$0.00	$183,801.78	$85,638.08	$35,575.63	$52,126.78	$10,461.29	$183,801.78
02/23/22	9	$43,303.24	$0.00	($1,703.86)	$0.00	$41,599.38	$19,382.24	$8,051.74	$11,797.72	$2,367.68	$41,599.38
03/14/22	10	$37,783.61	($668.06)	($1,402.78)	$212.81	$35,925.58	$16,738.67	$6,953.55	$10,188.61	$2,044.75	$35,925.58
04/15/22	11	$41,025.99	$0.00	($1,184.44)	$0.00	$39,841.55	$18,563.23	$7,711.50	$11,299.19	$2,267.63	$39,841.55
	TOTAL	**$ 2,130,685.33**	**$ (668.06)**	**$ (84,697.70)**	**$ 240.27**	**$ 2,045,559.84**	**$ 953,080.07**	**$ 395,926.95**	**$ 580,127.42**	**$ 116,425.40**	**$ 2,045,559.84**

99%	**Net Percent Collected**
$22,018.48	**Balance Remaining to Collect**

SECTION 4

SECTION i

TRUST *the* EXPERTS

For over a decade, our customers have entrusted us to provide safe and affordable playground and recreational equipment. Our team of Certified General Contractors and Playground Safety Inspectors will insure that your project is completed to perfection, providing truly turnkey service, with every step of the process from planning and budgeting, through the installation being handled under one roof.

PRO PLAYGROUNDS

The Play & Recreation Experts

1-800-573-7529 | www.proplaygrounds.com

PRO PLAYGROUNDS
The Play & Recreation Experts

Pro Playgrounds
8490 Cabin Hill Road
Tallahassee, FL 32311

Quote

Date	Estimate #
4/19/2022	15160

Project Name
2022 Shades

Customer / Bill To	Ship To
Randal Park CDD Logan Smith 8730 Randal Park Blvd Orlando, FL 32832	Randal Park HOA Logan Smith 8730 Randal Park Blvd Orlando, FL 32832

WE WILL BEAT ANY PRICE BY 5%!

Item	Description	Qty	Cost	Total:
	Furnish labor and materials to: 1. Install 1x 30'x15'x8' hanging cantilever shade.			
	SHADE STRUCTURES			
CSSD	Custom Shade Design - Rectangle Hanging Cantilever Shade: 30' Length x 15' Width x 8' Entry Height. (2) Columns on Base Plates + 6" surfacing at 8"x8". Beams at 8"x6". Rafters at Ø3.5" 11-Ga With Glide Elbows.	1	9,525.00	9,525.00T
ENGDRAW	Engineered Drawings for Permitting	2	840.00	1,680.00
Shipping	Combined Shipping and Freight Charges	1	2,142.40	2,142.40
	RAW MATERIALS			
FBLOCK	Footer Blocks	8	3.75	30.00
RBAR5	No. 5 Rebar	186	1.25	232.50
RMC	Ready Mix Concrete 2500 PSI MIN	5	195.00	975.00
	PERMIT, RENTALS & LABOR			
ISPERMIT	PERMIT - STATE OF FLORIDA	1	1,500.00	1,500.00
TRSH	Fees for dumpsters, debris hauling or other trash/materials removal including spoils from ecavations.	2	725.00	1,450.00
PT	Portable Toilet	1	150.00	150.00T
22-CONPUMP	Concrete Pumping Services, Basic, 4 Hr	1	795.00	795.00

AGREED AND ACCEPTED:
If the above total price, scope of work, specifications, terms and conditions are acceptable, sign below indicating your acceptance and authorization for Pro Playgrounds to proceed with the work and/or sales transaction described in this quotation. Upon signature and payment in accordance with this quote, Pro Playgrounds will proceed with the work and/or sales transaction.

Signature _____ Name / Title _____ Date ___/___/___

Subtotal:	
Sales Tax: (6.5%)	
Total:	

Terms and Conditions - Price valid for 30 days and subject to change. 1. If installation is not included with your purchase, client will be responsible for coordinating, receiving and unloading of all goods, delivery drivers will not help unload goods. 2. Client will be responsible to inspect goods for defect, damage or missing parts, any deficiency or missing parts must be noted on delivery slip. 3. Client will be responsible for costs due to cancelled or missed delivery appointments. 4. Client has reviewed all items, colors and descriptions on this quote for accuracy and correctness. 5. If quote includes installation of goods, the installation is subject to the terms and conditions of Pro Playgrounds "Standard Installation Agreement" a copy of which may be obtained from your Sales Representative.

PRO PLAYGROUNDS
The Play & Recreation Experts

Pro Playgrounds
8490 Cabin Hill Road
Tallahassee, FL 32311

Quote

Date	Estimate #
4/19/2022	15160

Project Name
2022 Shades

Customer / Bill To	Ship To
Randal Park CDD Logan Smith 8730 Randal Park Blvd Orlando, FL 32832	Randal Park HOA Logan Smith 8730 Randal Park Blvd Orlando, FL 32832

WE WILL BEAT ANY PRICE BY 5%!

Item	Description	Qty	Cost	Total:
MINEXDAY	Mini Excavator Daily Rental	1	577.85	577.85
FLIFTDAY	Telescopic Fork Lift Daily Rental	1	1,308.10	1,308.10
LBR	Labor and Installation - New Shade Structures **NOTE** Customer is responsible for removal of existing pergolas including footers prior to install.	1	11,004.27	11,004.27

AGREED AND ACCEPTED:
If the above total price, scope of work, specifications, terms and conditions are acceptable, sign below indicating your acceptance and authorization for Pro Playgrounds to proceed with the work and/or sales transaction described in this quotation. Upon signature and payment in accordance with this quote, Pro Playgrounds will proceed with the work and/or sales transaction.

Signature Name / Title Date / /

Subtotal:	$31,370.12
Sales Tax: (6.5%)	$628.88
Total:	$31,999.00

Terms and Conditions - Price valid for 30 days and subject to change. 1. If installation is not included with your purchase, client will be responsible for coordinating, receiving and unloading of all goods, delivery drivers will not help unload goods. 2. Client will be responsible to inspect goods for defect, damage or missing parts, any deficiency or missing parts must be noted on delivery slip. 3. Client will be responsible for costs due to cancelled or missed delivery appointments. 4. Client has reviewed all items, colors and descriptions on this quote for accuracy and correctness. 5. If quote includes installation of goods, the installation is subject to the terms and conditions of Pro Playgrounds "Standard Installation Agreement" a copy of which may be obtained from your Sales Representative.

Hanging Cantilever Hip Shade

Length	30	**Width**	15	**Entry Height**	8
Peak Height	11.03	**Elbow**	Glide	**Column Mount**	Base Plate
Column Size	8080.25	**Rafter Size**	3.511	**Ridge Size**	3.511
Column Length	9.5	**Rafter Length**	10.6637693	**Ridge Length**	16.1013512

Dome Qty: 1 **Column Qty:** 2

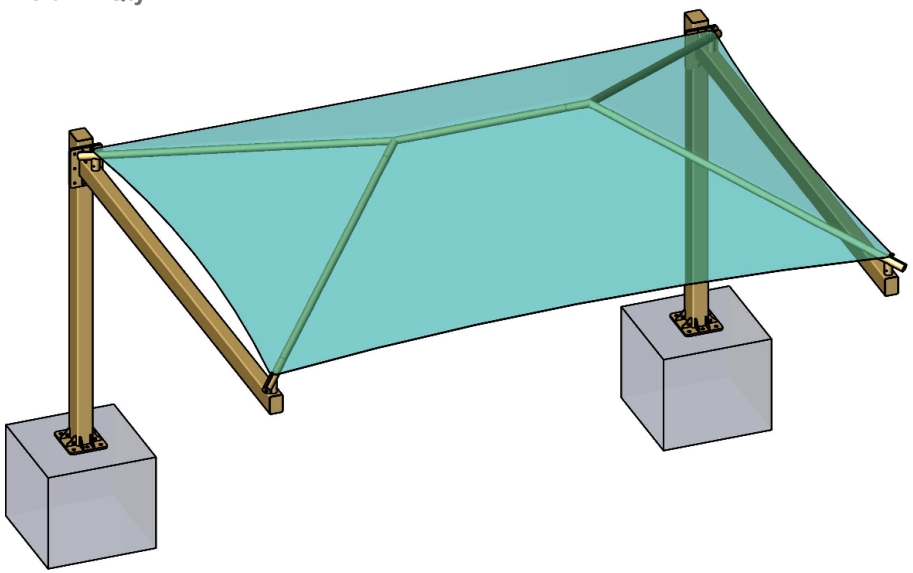

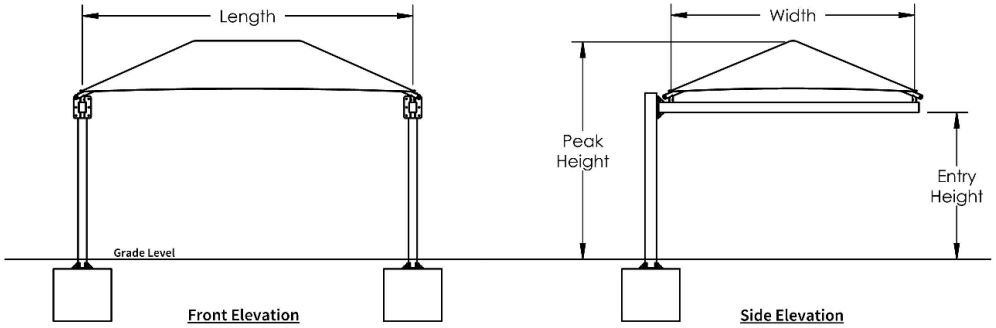

Square Footing		
Column	Length & Width	Depth
Single Cap	4.17	3
Double Cap	N/A	3

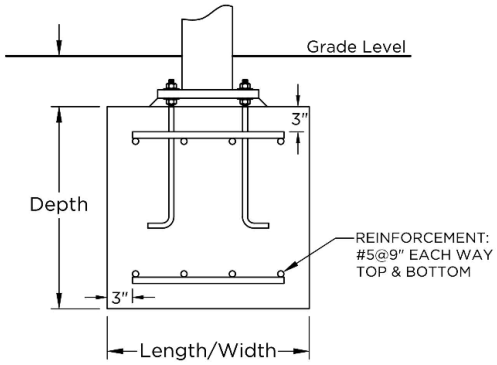

Auger Footing		
Diameter	Single Cap Depth	Double Cap Depth
1'-6"		
2'-0"	Out of range	N/A
2'-6"	Out of range	N/A
3'-0"	5.91	N/A

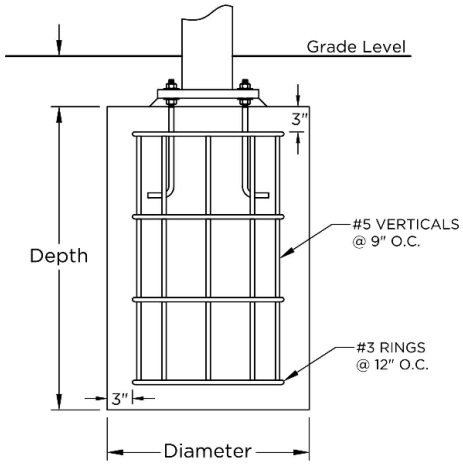

SHADE	QUOTE	SHADE SIZE	SHADE STYLE	
	QUO0239173A	30 X 15	**Hanging Cantilever Hip Shade**	*These drawings are for reference only and should not be used as construction details. They show the general character and rough dimensions of the structural features. Exact spans, fasteners, materials, and foundations can be determined by a licensed professional engineer upon request. Estimated footing size above is based on 1,500 PSF soil bearing pressure.*

CREATIVE SHADE SOLUTIONS

Estimate

719 Wesley Ave.
Tarpon Springs, FL 34689
727-947-3067
www.creativeshadesolutions.com

Date	Order No.
4/28/2022	2022-0173

Name / Address	Ship To
GMS Logan Smith	

Project	Sales Person	P.O. No.

Qty	Item #	Description	Unit Price	Amount
1	2 Post Canti	2 Post Canti 30' x 15' x 8' entry level Full Canti Shade Structure Galvanized post - Galvanized frame Frame color: TBD Quick release cable Commercial 95 fabric - 10 year warranty Fabric color: TBD	6,800.00	6,800.00T
1	Install	Full installation / materials / concrete Dirt removal, Spread on property 50' from job site *** Full access needed for trucks / trailers/concrete trucks *** No site work included ***	6,000.00	6,000.00T
1	Permit	Permit application - Prep and submit	750.00	750.00T
1	Engineer Set	Sealed Engineered Drawings	900.00	900.00
1	Permit Fees	County / City Permits Fees -TBD - paid by client		0.00T
1	Shipping	***Estimated Shipping, subject to change***	350.00	350.00

- This is a quotation on the goods named, subject to the conditions noted below:
- Siteplan/Survey must be provided by client/owner showing the property as needed for permitting.
- Client will do the locating services. call 811 before digging.
- No site work included, client will fix any damaged underground pipe or wires.
- Client will provide water and electricity. Water and electric available on job site.
- Dirt will be moved 75' away at no costs. Construction dumpster on job site.
- Client will provide easy access to the work area, by removing fences etc.
- Will use standard insurances. Any extra insurance requiremants must be quoted on.
- If we don't do the installations : Add 7% for sales tax.
- Estimate valid for 30 days.
- 3% Credit Card Processing Fee
- 50% Deposit required.

Subtotal	$14,800.00
Sales Tax (0.0%)	$0.00
Total	$14,800.00

Deposit Required
$7400

Signature _____

THANK YOU FOR YOUR BUSINESS!

SECTION ii

Pressure Washing Orlando LLC

Clean and stain clubhouse fence

$6,392.00

Treat for mold and algae, light sand where needed seal with a stain matching the existing color. Total lineal foot 800 with two coats and a 5 year warranty./

Pergola restoration (Play ground on Lovett)

$3,148.06

Treat for mold and algae, light sand where needed seal with a stain matching the existing color. Total lineal foot 394 with two coats and a 5 year warranty. Free replacement of all bad wood. Client pays for wood materials.

SHOW LESS

Pergola restoration (small twin pergolas)

$2,397.00

Treat for mold and algae, light sand where needed seal with a stain matching the existing color. Total lineal foot 300 with two coats and a 5 year warranty. Free replacement of all bad wood. Client pays for wood materials.

SHOW LESS

Pergola restoration (Wallow creek)

$3,020.22

Treat for mold and algae, light sand where needed seal with a stain matching the existing color. Total lineal foot 378 with two coats and a 5 year warranty. Free replacement of all bad wood. Client pays for wood materials.

ESTIMATE

Logan Smith
8730 Randall Park Blvd
Orlando , Fl 32812

(706) 329-4008

Best Cleaning & Restoration Inc
51 E. Jefferson Ave P.O Box 1548
Orlando, Florida 32801

Phone: (407) 561-0881
Email: bestcleaningtop2bottom@gmail.com
Web: Www.Bestcleaningandrestorationinc.com

Estimate #	001470
Date	04/11/2022

Description	**Total**
CLEAN & SEAL PERGOLAS	$6,000.00
Clean 4 pergolas removing mold, Burroughs, & splinters by way of light sanding as needed (180 grit). Pre treat with cleaning solution, agitate, rinse, allow to dry thoroughly.	
Apply 2 coats of transparent sealer.	
Black aluminum or Steele grating cleaned as well on 1 pergola	
CLEAN & SEAL CATTLE FENCING	$6,680.00
Pre treat, scrub, rinse 668 linear feet of cattle fencing (both sides included in measurements) allow to dry thoroughly.	
Apply 2 coats of colored stain / sealer.	
Choice of color to be determined by customer.	
*PLEASE ALLOW 7 to 10 DAYS TO FULLY COMPLETE.	
* PLEASE NOTE WEATHER IN TIME COMPLETION FACTOR	
*DISCOUNTED PRICES BASED ON LARGE AMOUNTS OF WORK TO BE DONE.	

Subtotal	$12,680.00
Total	**$12,680.00**
Deposit Due	**$6,340.00**

Payment Schedule	
Deposit (50%)	$6,340.00
2nd payment due upon completion (50%)	$6,340.00

By signing this document, the customer agrees to the services and conditions outlined in this document.

SECTION 5

RANDAL PARK

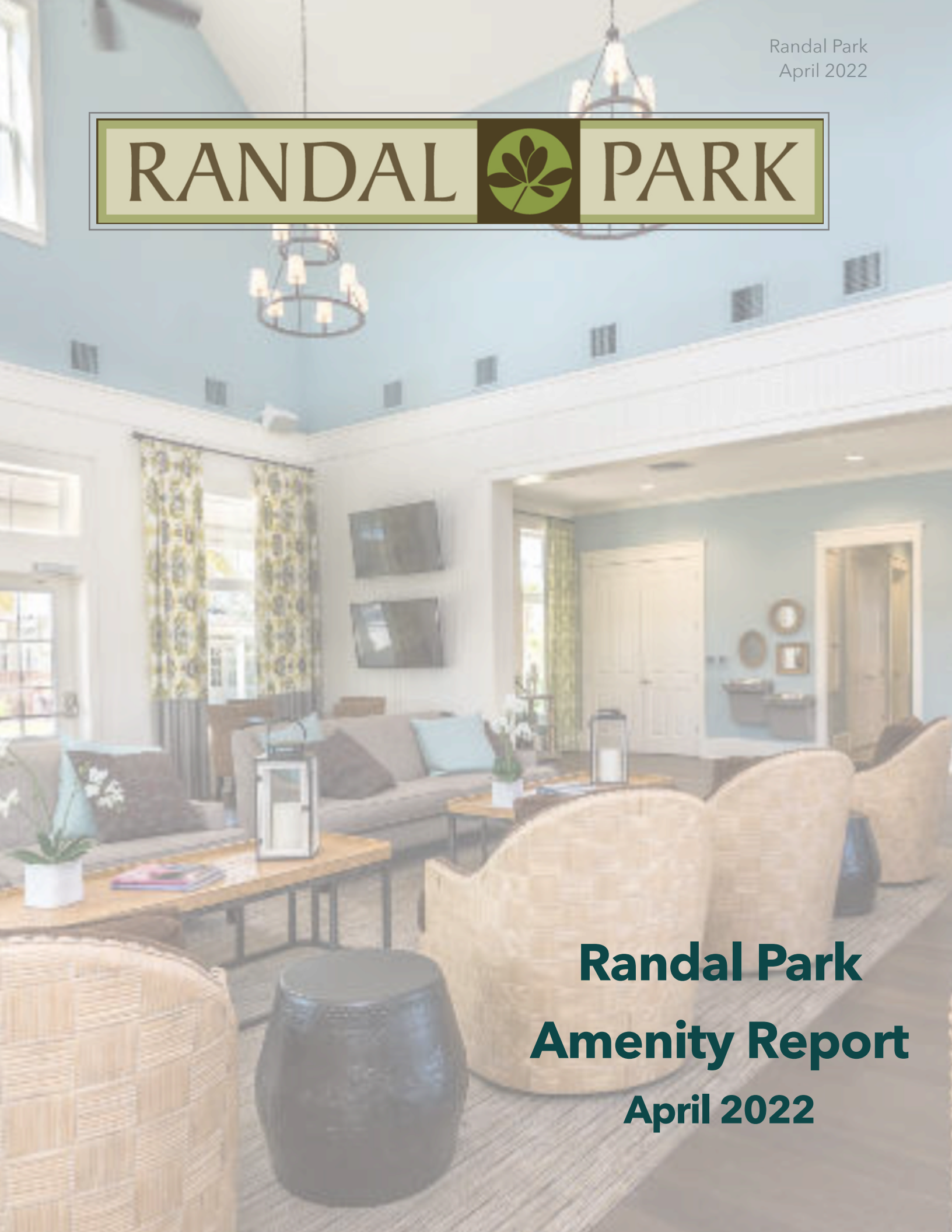

Randal Park Amenity Report

April 2022

FACILITY REPORT:

Randal Park
April 2022

Pool, Gym and Randal House Clubhouse

- The BBQ areas are opened (9am - 8pm) Daily
- Gym (24/7)
- Pool (7am - 8pm) (7am - 9am lap swimmers only) Daily
- Randal House Clubhouse (10am - 6pm) Mon - Fri
- Onsite office staff is open from (9am - 5pm) Mon - Fri
- Pool Attendant is onsite Saturday & Sunday 12pm - 8pm

April Randal House Rentals: 6

March Events:

* Food Truck Social:
    Oiishimotto: 28 orders
    One Way Coffee: 41 orders
    El Cubanito Subs: Canceled
* Pizza Night:
    100+112= 212
* Chick fil-A:
    58 Transactions
* Coffee Break:
    12 Orders

Stereo System was installed in the pool area on April 29.

Events scheduled for May:

* Chick-fil-A Night: Tuesday, May 3
* Pizza Night - Thursday, May 5 & 19
* Food Truck Social: Thursday, May 12
* Wine and Cheese, May 26
* Coffee Break: Last Friday of the month, May 27

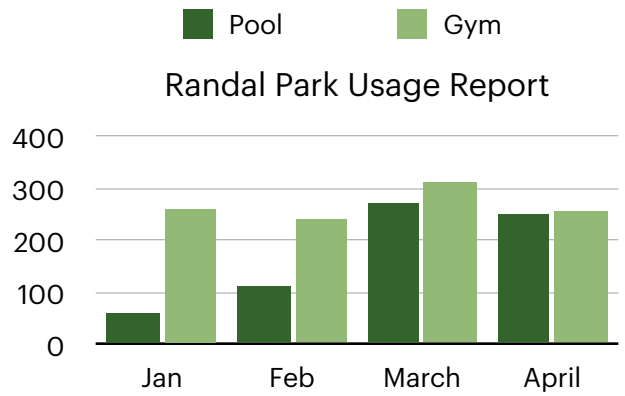

Randal Park
April 2022

Happy Hoppy Easter

Happy Hoppy Easter

Saturday, April 16
11:00am-1:00pm

Attendance: 292 Residents
Adults: 151 Residents
Total Kids over 3 = 94
Total Kids under 3 = 42

Yellowstone sponsored the meals from Chick-Fil-A
Total Meals: 310

2021 Participation

Children under 2 years:	41
Children over 2 years:	99
Total Count:	**292**

Ladies Night

Thursday, April 7
6:00pm-8:00pm

Attendance: 40
The event was hosted by 2 Randal Park residents. The Randal Park CDD sponsored a charcuterie board for the participants.