Randal Park Community Development District

Agenda

April 15, 2022

AGENDA

Randal Park
Community Development District

Meeting Agenda

Friday
April 15, 2022
9:30 AM

Randal House Clubhouse
8730 Randal Park Blvd.
Orlando, Florida

1. Roll Call
2. Public Comment Period (Speakers will fill out a card and submit it to the District Manager prior to the beginning of the meeting)
3. Approval of Minutes of the March 18, 2022 Meeting
4. Public Hearing
   A. **Consideration of Resolution 2022-02 Adopting Amended and Restated Rules of Procedure-** ***Added***
5. Engineer's Report
6. Discussion of Yoga Classes
7. **Discussion of Cell Tower Access –** ***Added***
8. **Discussion of Memorial of Charlie Keller -** ***Added***
9. Staff Reports
   A. Attorney
   B. District Manager's Report
      i. Approval of Check Register
      ii. Balance Sheet and Income Statement
      iii. Field Manager's Report
         1. **Proposals for Landscape Maintenance and Improvement**
         2. **Proposals for Shade Structure Option and Removal of Existing**
         3. **Proposals for Lighting Replacement and Improvement Options**
      iv. Amenity Report
      v. Discussion of Qualifying Period and Procedure
10. Supervisor's Requests
11. Other Business
12. Next Meeting Date
13. Adjournment

MINUTES

MINUTES OF MEETING
RANDAL PARK
COMMUNITY DEVELOPMENT DISTRICT

The regular meeting of the Board of Supervisors of the Randal Park Community Development District was held Friday, **March 18, 2022** at 9:30 a.m. at the Randal House Clubhouse, 8730 Randal Park Boulevard, Orlando, Florida.

Present and constituting a quorum were:

Stephany Cornelius	Chairperson
Katie Steuck	Vice Chairperson
David Grimm	Assistant Secretary

Also present were:

Jason Showe	District Manager
Kristin Trucco	District Counsel
James Hoffman	District Engineer
Marshall Tindell	Field Operations
Logan Smith	Field Operations
Marcia Calleja	Amenity Manager
Alexandra Panagos	Community Manager
Residents	

FIRST ORDER OF BUSINESS **Roll Call**

Mr. Showe called the meeting to order and called the roll.

SECOND ORDER OF BUSINESS **Public Comment Period**

Ms. Williams stated thank you for the updated email on the wall project, I appreciate that response. I didn't know if we could confirm with the project team if they have completely restored the pond to its original state and if we could revisit if the project is completely done because of the email response to revisit the electrical and the water fountain installation that we were waiting on the project to be done.

Mr. Grimm stated I wouldn't imagine the project is complete.

Ms. Trucco stated we haven't received notification that it is completed yet, but I can reach back out and find out what their timetable looks like right now. There has been a wall constructed but I will try to confirm their timetable.

Mr. Hoffman stated it was very foggy this morning, but it looked close to being done on the wall.

Mr. Showe stated they indicated earlier this week that they completed work on the wall and landscaping and they may have additional maintenance work, there are still some things to go.

Ms. Trucco stated it sounds like Jason has direct communication with Brightline now and the board may want him to communicate with them, ask for timetable confirmation, that would be the best route.

Mr. Hoffman stated there is usually a process to certify the pond complete with the district they will have to go through and that may lag a little bit. Once that is done, they should be able to say they are complete on this side of the wall.

Ms. Williams asked how will we know that certification has been completed?

Mr. Hoffman stated Brightline will be completing that with the water management district and that is all public record and we can communicate with them and hopefully be in the loop.

Ms. Williams stated that will be good to know so we can move forward with the electrical and the fountain. I didn't know if Cornerstone would be coming back to look at what they have done to revisit that supplementing of landscape.

Ms. Cornelius stated once we get the certification that the project is complete, we can address the additional landscaping.

Ms. Williams stated if you drive to the back of the community, you will see that they have installed all the trees that have been promised.

Ms. Cornelius stated we have seen it.

A resident stated I live in the corner of Langefield and Andreas where the cell tower access is and wanted to find out the plan to clean that up. I know they installed some sod after it was destroyed the first time and two days later it was destroyed again. Is there a plan to do anything about that in the future? When will that be cleaned up again because it looks terrible?

Ms. Steuck stated we discussed that at length at the last meeting and we came to the agreement that resodding and repairing it and doing it again and again is not a permanent solution. Chuck who works with Mattamy is not here today was supposed to get us an update on some other potential options.

Mr. Showe stated counsel drafted a letter that went to Mattamy that referenced their agreement with the district.

Ms. Trucco stated I reviewed the access easement agreement that the district entered into with Mattamy from 2018 and it does state that the district has a right to be indemnified for any damage or loss that comes from Mattamy's use or Mattamy's agents, which would be the cellphone companies use of our property. We drafted a letter requesting Mattamy to look into the installation of alternative materials and contact GMS to discuss those materials so we will need Jimmie's help and Yellowstone's assistance in determining what would be the best material to make it more aesthetically pleasing.

Ms. Cornelius asked in that agreement is there a clause that requires them to repair the damage they caused?

Ms. Trucco responded no, there is just an obligation that they are to indemnify us for any damage or loss stemming from their use of our property to access the cell tower.

Ms. Cornelius asked when did you send that letter?

Ms. Trucco responded it went out yesterday and we also contacted Chuck to make him aware of it.

Ms. Cornelius asked do you have any other suggestions?

Mr. Hoffman responded we provided a typical section for that area about eight years ago. I can easily pull that, it had suggestions for what we call a low water crossing, it is a wetland slough that goes through there and sod is going to stay muddy and when they drive through it is going to get torn up. The preferred option is usually some kind of rock, gravel, whatever and a sign so if there is water flowing through, which it should, trucks will know how deep it is before they cross it.

A resident stated if they put down rocks, all that does is invite people who shouldn't go back there to go back there. It has been a problem. I constantly see people walking and riding bikes back there. Is there something we can do to put a chain link across that apron driveway to

prevent cars and people from going back there? Clearly that sign that is in the yard is not doing any good.

Mr. Grimm stated I understand there is a gate back there when you get into the actual wetland.

A resident stated that is true but if people don't lock the gate, the gate sometimes stays wide open.

Mr. Hoffman stated from an engineering perspective anything we do to make it less likely to rut up and destroy the sod is going to contribute to that invitation. The options to make it more stable are going to make it look more robust and you have to weigh those two concerns. You can do a stabilized grass section through there that looks like grass but in an area that muddy and holds that much water I'm not sure how well that would survive.

Ms. Cornelius stated I think Chuck said it was stabilized grass.

Ms. Hoffman stated there are other systems such as geogrid.

A resident stated that geogrid is already in there.

Mr. Hoffman stated it is a function of the underlying soils that are throughout all of Randal Park, the east side of Orange County, they hold a lot of water, it is not good free draining sand. You can put down geogrid, but it is running across jello, it is not like a full-blown road base.

Ms. Steuck asked can we before the next meeting have a couple options that we can discuss?

Mr. Showe stated yes and hopefully by then we will have heard back from Mattamy on what they might be willing to do.

Mr. Grimm stated it is CDD property with an easement granted to Mattamy, which in turn granted access to a cellphone tower.

Ms. Trucco stated Mattamy and Mattamy's agents, which would be a cell company, one they have authorized to use.

Mr. Grimm stated we can keep it as is but I believe it is more important to have the surface dealt with even though it could potentially provide an invitation for people to go back there.

Ms. Cornelius asked if that easement agreement is terminated would that force the cell tower company to get access from the highway?

Ms. Trucco stated I'm not sure what access they would have. The cell tower probably provides a benefit to the people who live in this community. If the board wants me to look into possible ramifications if we did terminate it, I can do that.

Ms. Cornelius stated I don't think terminate it right away but put a little fire under them to deal with this.

Mr. Hoffman stated I know the board has the ability to terminate any kind of agreement but typically access easements are not as easily terminated. It seems odd to say that the board could take away the access easement.

Ms. Cornelius stated I don't think that is the intention, the intent is that Mattamy will cooperate and make this right.

Mr. Hoffman stated I can go out and look at it after this meeting to get a sense of the elevations. I don't know if it is possible to raise that site so it would be a little more free draining that may help the grass stay stable. There may be an option that blends in.

THIRD ORDER OF BUSINESS **Approval of the Minutes of the February 18, 2022 Meeting**

On MOTION by Ms. Cornelius seconded by Ms. Steuck with all in favor the minutes of the February 18, 2022 meeting were approved as presented.

FOURTH ORDER OF BUSINESS **Engineer's Report – Stormwater and Wastewater 20-Year Needs Analysis**

Mr. Hoffman stated I drove around the community this morning and already shared status of completion of the north pond and that looks like it is coming along. There were no major issues identified or on my radar.

We have been working with district staff for the state's new required 20-year needs assessment, which applies to both stormwater and wastewater. We had some guidance on stormwater a few months ago and the wastewater came out just last month. We are going to wrap up a proposal to do the report required by state law that has to be filed with the state. Based on the wastewater guidance the district does not have any wastewater facilities, everything is City of Orlando owned and maintained so we will not need to complete that. We will file a letter to that affect so we will only have to do the stormwater assessment.

> On MOTION by Mr. Grimm seconded by Ms. Cornelius with all in favor the proposal to prepare the 20-year needs analysis for the stormwater and wastewater system in an amount not to exceed $10,000 was approved and the chair was authorized to execute the formal proposal.

FIFTH ORDER OF BUSINESS **Review and Acceptance of Fiscal Year 2021 Audit Report**

Mr. Showe stated the report to management on page 30 contains the items they are statutorily required to look at and you can see there are no current year findings, no prior year findings and it is a clean audit.

> On MOTION by Mr. Grimm seconded by Ms. Cornelius with all in favor the fiscal year 2021 audit report was accepted and staff authorized to transmit the final document to the State of Florida.

SIXTH ORDER OF BUSINESS **Consideration of Swim Lesson Agreement with SwimKids USA**

Mr. Showe stated this item is a follow-up to our discussion with the swim vendors at last meeting. We were able to come to a tentative agreement with SwimKids USA and that is in your agenda. It starts April 1, hours are Monday through Friday classes between 8 and 7 and that doesn't mean they are going to use all that time but it gives them flexibility. We limited weekends to morning classes. They will give 10% discount to all residents.

> On MOTION by Ms. Cornelius seconded by Mr. Grimm with all in favor the swim lesson agreement with SwimKids USA was approved.

SEVENTH ORDER OF BUSINESS **Ratification of Polling Place Agreement with City of Orlando**

> On MOTION by Ms. Cornelius seconded by Mr. Grimm with all in favor the polling place agreement with the City of Orlando was ratified.

EIGHTH ORDER OF BUSINESS Staff Reports

A. Attorney

There being none, the next item followed.

B. Manager

i. Approval of Check Registers

On MOTION by Ms. Cornelius seconded by Ms. Steuck with all in favor the check register was approved.

ii. Balance Sheet and Income Statement

A copy of the balance sheet and income statement were included in the agenda package.

iii. Field Manager's Report

Mr. Tindell gave an overview of the field manager's report, which was distributed at the meeting and discussed dog park fencing proposals, pergolas and shade structure options, condition of existing pergolas and improved lighting by the playground.

iv. Amenity Report

A copy of the amenity center report was included in the agenda package.

NINTH ORDER OF BUSINESS Supervisor's Requests

Mr. Grimm stated on behalf of the board I would like to express my condolences to Sylvie on the passing of her husband, Charlie who was one of the original residents and would like to memorialize him on our property such as planting a tree.

TENTH ORDER OF BUSINESS Other Business

There being none, the next item followed.

ELEVENTH ORDER OF BUSINESS Next Meeting Date

Mr. Showe stated the next meeting will be held April 15, 2022 and that will be the hearing on the rules.

TWELTH ORDER OF BUSINESS Adjournment

Mr. Showe asked for a motion to adjourn the meeting.

On MOTION by Ms. Cornelius seconded by Ms. Steuck with all in favor the meeting adjourned at 10:42 a.m.

_____ _____

Secretary/Assistant Secretary Chairman/Vice Chairman

SECTION IV

SECTION A

RESOLUTION 2022-02

A RESOLUTION OF THE BOARD OF SUPERVISORS OF THE RANDAL PARK COMMUNITY DEVELOPMENT DISTRICT ADOPTING AMENDED AND RESTATED RULES OF PROCEDURE; PROVIDING A SEVERABILITY CLAUSE; AND PROVIDING AN EFFECTIVE DATE.

WHEREAS, the Randal Park Community Development District ("**District**") is a local unit of special-purpose government created and existing pursuant to Chapter 190, *Florida Statutes*, being situated entirely within Orange County, Florida; and

WHEREAS, Chapter 190, *Florida Statutes*, authorizes the District to adopt rules to govern the administration of the District and to adopt resolutions as may be necessary for the conduct of District business; and

WHEREAS, the District has previously adopted Rules of Procedure to govern the administration of the District; and

WHEREAS, to provide for efficient and effective District operations and to maintain compliance with recent changes to Florida law, the Board of Supervisors finds that it is in the best interests of the District to adopt by resolution the Amended and Restated Rules of Procedure attached hereto as **Exhibit A** for immediate use and application; and

WHEREAS, the Board of Supervisors has complied with applicable Florida law concerning rule development and adoption.

NOW, THEREFORE, BE IT RESOLVED BY THE BOARD OF SUPERVISORS OF THE RANDAL PARK COMMUNITY DEVELOPMENT DISTRICT:

SECTION 1. The attached Amended and Restated Rules of Procedure are hereby adopted pursuant to this resolution as necessary for the conduct of District business. These Amended and Restated Rules of Procedure replace all prior versions of the Rules of Procedure, and shall stay in full force and effect until such time as the Board of Supervisors may amend these rules in accordance with Chapter 190, *Florida Statutes*.

SECTION 2. If any provision of this resolution is held to be illegal or invalid, the other provisions shall remain in full force and effect.

SECTION 3. This resolution shall become effective upon its passage and shall remain in effect unless rescinded or repealed.

PASSED AND ADOPTED this 15th day of April, 2022.

ATTEST:

RANDAL PARK COMMUNITY DEVELOPMENT DISTRICT

_____
Secretary/Assistant Secretary

_____
Chairperson, Board of Supervisors

Exhibit A: Amended and Restated Rules of Procedure

EXHIBIT A:

AMENDED AND RESTATED RULES OF PROCEDURE

SECTION VI

Hello! My name is Angela Lewis and I moved to Randal Park a little over a year ago. I am a 500-hour certified yoga teacher. Additionally, I have certifications as an Ayurveda Yoga Specialist, a Level II Reiki practitioner, SEED meditation, and Barre fitness. Also of note, I carry insurance as a yoga teacher.

Based on conversations that I have had with neighbors and on the Randal Park Ladies FaceBook page, there is an interest in our community for a yoga class(es) to be offered at the Clubhouse. I would like to propose offering yoga class(es) beginning on Tuesdays from 6:30 pm-7:30 pm. This class would be a gentle flow class. However, I am able to adjust and adapt classes as needed.

I would love to see this opportunity grow! Special monthly classes . . . Classes for runners . . . Prenatal classes . . . Ayurveda workshops . . . Wine and Unwind . . . There are so many possibilities!

Thank you for considering this opportunity to foster wellness and continue building a sense of community here in Randal Park!

Please note that my experience as a yoga teacher includes teaching yoga (and Barre fitness) classes at Trinity Yoga in Hurricane, WV. I also taught classes for my colleagues at Barboursville Middle School in Barboursville, WV and at the Huntington City Mission in Huntington, WV.

Respectfully,
Angela Lewis
304-633-7055
8843 Ribault Avenue

SECTION IX

SECTION B

SECTION 1

Randal Park
Community Development District

Check Run Summary

March 1, 2022 thru March 31, 2022

Fund	Date	Check No.'s	Amount
General Fund	3/1/22	2422 - 2425	$754.45
	3/8/22	2426 - 2431	$37,145.93
	3/15/22	2432 - 2435	$19,324.99
	3/22/22	2436 - 2439	$2,608.54
	3/25/22	2440	$3,690.00
	3/28/22	2441	$562.50
	3/29/22	2442 - 2444	$2,360.50
			$66,446.91

*** CHECK DATES 03/01/2022 - 03/31/2022 *** RANDAL PARK CDD
BANK A RANDAL PARK CDD

CHECK DATE	VEND#	.....INVOICE..... DATE	INVOICE	...EXPENSED TO... YRMO	DPT ACCT# SUB SUBCLASS	VENDOR NAME	STATUS	AMOUNT	....CHECK..... AMOUNT	#
3/01/22	00043	2/22/22	15854939	202202	320-53800-46800		*	50.00		
			PEST CONTROL - FEB 22							
						ARROW ENVIRONMENTAL SERVICES			50.00	002422
3/01/22	00128	2/27/22	I-022722	202202	320-53800-47600		*	549.50		
			SECURITY SVC 02/13-02/26							
						ORLANDO POLICE DEPT.			549.50	002423
3/01/22	00049	3/01/22	214382	202203	320-53800-34500		*	34.95		
			SECURITY MONITORING-MAR22							
						SYNERGY FL			34.95	002424
3/01/22	00136	3/01/22	W5236	202203	320-53800-34500		*	120.00		
			SECURITY MONITORING-MAR22							
						WI-PAK			120.00	002425
3/08/22	00123	3/03/22	31565	202202	320-53800-12300		*	195.00		
			BACKFLOW TEST - FEB 22							
						AARON'S BACKFLOW SERVICES INC			195.00	002426
3/08/22	00128	3/06/22	I-030622	202203	320-53800-47600		*	755.50		
			SECURITY SVC 02/27-03/05							
						ORLANDO POLICE DEPT.			755.50	002427
3/08/22	00061	3/03/22	138066	202203	320-53800-51000		*	602.00		
			LITTER PICK UP BAGS/LINER							
						PROPET DISTRIBUTORS, INC.			602.00	002428
3/08/22	00127	2/04/22	21131	202202	300-13100-10400		*	10,830.52		
			PLAYGRND EQUIPMNT-Q16003D							
						PLAYMORE WEST INC.			10,830.52	002429
3/08/22	00039	3/01/22	7201	202203	320-53800-46400		*	600.00		
			POOL MAINTENANCE - MAR 22							
		3/01/22	7202	202203	320-53800-46900		*	150.00		
			FOUNTAIN MAINT - MAR 22							
						ROBERTS POOL SERVICE AND REPAIR INC			750.00	002430
3/08/22	00066	2/15/22	ON 32845	202202	320-53800-46200		*	24,012.91		
			LANDSCAPE MAINT - FEB 22							
						YELLOWSTONE LANDSCAPE-SOUTHEAST,LLC			24,012.91	002431
3/15/22	00031	2/28/22	200844	202202	320-53800-47000		*	285.00		
			LAKE MAINT 5 PDS - FEB 22							
		2/28/22	200844	202202	320-53800-47000		*	55.00		
			LAKE MAINT DOWDEN-FEB 22							

*** CHECK DATES 03/01/2022 - 03/31/2022 ***
RANDAL PARK CDD
BANK A RANDAL PARK CDD

CHECK DATE	VEND#	.....INVOICE..... DATE	INVOICE	...EXPENSED TO... YRMO	DPT ACCT# SUB SUBCLASS	VENDOR NAME	STATUS	AMOUNT	....CHECK..... AMOUNT	#
		2/28/22	200844	202202	320-53800-47000		*	50.00		
			MAINT AC1 RETENT - FEB 22							
		2/28/22	200844	202202	320-53800-47000		*	95.00		
			MAINT AC2 RETENT - FEB 22							
		2/28/22	200844	202202	320-53800-47000		*	355.00		
			MAINT 4 RET PONDS-FEB 22							
						APPLIED AQUATIC MANAGMENT,INC.			840.00	002432
3/15/22	99999	3/15/22	VOID	202203	000-00000-00000		C	.00		
			VOID CHECK							
						******INVALID VENDOR NUMBER******			.00	002433
3/15/22	00001	2/28/22	681	202201	320-53800-46000		*	400.00		
			ROOF REPAIRS - JAN 22							
		3/01/22	677	202203	310-51300-34000		*	3,482.67		
			MANAGEMENT FEES - MAR 22							
		3/01/22	677	202203	310-51300-35200		*	100.00		
			WEBSITE MANAGEMENT-MAR 22							
		3/01/22	677	202203	310-51300-35100		*	116.67		
			INFORMATION TECH - MAR 22							
		3/01/22	677	202203	310-51300-31300		*	875.00		
			DISSEMINATION SVCS-MAR 22							
		3/01/22	677	202203	310-51300-51000		*	1.38		
			OFFICE SUPPLIES							
		3/01/22	677	202203	310-51300-42000		*	23.69		
			POSTAGE							
		3/01/22	677	202203	310-51300-42500		*	47.40		
			COPIES							
		3/01/22	678	202203	320-53800-12100		*	6,620.08		
			AMENITY MANAGEMENT-MAR 22							
		3/01/22	679	202203	320-53800-12300		*	2,426.67		
			FACILITY MAINT - MAR 22							
		3/01/22	680	202203	320-53800-12000		*	1,492.67		
			FIELD MANAGEMENT - MAR 22							
		3/01/22	680	202203	310-51300-42000		*	26.37		
			GOING POSTAL							
		3/01/22	680	202203	320-53800-51000		*	67.90		
			AMAZON							
		3/01/22	680	202203	320-53800-47700		*	1,276.32		
			FREEMOTION							
		3/01/22	680	202203	320-53800-51000		*	298.17		
			HOME DEPOT-MAINT.MATERIAL							
						GOVERNMENTAL MANAGEMENT SERVICES			17,254.99	002434
3/15/22	00108	3/01/22	39265	202203	320-53800-46700		*	1,230.00		
			JANITORIAL SERVICE-MAR 22							
						RUGBY COMMERCIAL CLEANING, LLC			1,230.00	002435

*** CHECK DATES 03/01/2022 - 03/31/2022 *** RANDAL PARK CDD
BANK A RANDAL PARK CDD

CHECK DATE	VEND#	.....INVOICE..... DATE	INVOICE	...EXPENSED TO... YRMO	DPT ACCT# SUB	SUBCLASS	VENDOR NAME	STATUS	AMOUNT	....CHECK..... AMOUNT	#
3/22/22	00060	2/28/22	S234930	202202	320-53800-46000			*	372.00		
			RPR SOFTWARE/RPL SIM CARD								
							ACCESS CONTROL TECHNOLOGIES			372.00	002436
3/22/22	00025	3/17/22	26076	202202	310-51300-31500			*	1,345.47		
			ATTND MTG/PREP RULE/EMAIL								
							LATHAM, LUNA, EDEN & BEAUDINE LLP			1,345.47	002437
3/22/22	00038	3/02/22	380169	202203	320-53800-46300			*	182.00		
			ACCUTABS 60 POUND PAIL								
							SPIES POOL, LLC			182.00	002438
3/22/22	00066	3/14/22	ON 33970	202203	320-53800-47200			*	484.57		
			MULCH-EDGES OF PLAY AREA								
		3/14/22	ON 33970	202203	320-53800-47200			*	224.50		
			INSTALL 25 BAGS OF MULCH								
							YELLOWSTONE LANDSCAPE-SOUTHEAST,LLC			709.07	002439
3/25/22	00142	3/25/22	127559	202203	300-13100-10100			*	3,690.00		
			DOGPARK FENCE DEPOSIT 50%								
							AMERICAN ALL SECURE GATES & FENCE			3,690.00	002440
3/28/22	00143	2/01/22	02012022	202203	320-53800-49400			*	562.50		
			ICE CREAM EVENT 3/26/22								
							CROOKED COW CREAMERY, LLC			562.50	002441
3/29/22	00043	3/23/22	16026849	202203	320-53800-46800			*	50.00		
			PEST CONTROL - MAR 22								
							ARROW ENVIRONMENTAL SERVICES			50.00	002442
3/29/22	00128	3/13/22	I-031322	202203	320-53800-47600			*	755.50		
			SECURITY SVC 03/06-03/13								
		3/20/22	I-032022	202203	320-53800-47600			*	549.50		
			SECURITY SVC 03/13-03/18								
		3/27/22	I-032722	202203	320-53800-47600			*	755.50		
			SECURITY SVC 03/20-03/26								
							ORLANDO POLICE DEPT.			2,060.50	002443
3/29/22	00145	3/23/22	03232022	202203	300-36900-10200			*	250.00		
			PRIVATE PARTY CANCELED								
							ZAHYDIE L. BURGOS			250.00	002444

TOTAL FOR BANK A 66,446.91

TOTAL FOR REGISTER 66,446.91

SECTION 2

Randal Park

Community Development District

Unaudited Financial Reporting

March 31, 2022

Table of Contents

Randal Park

Community Development District

Combined Balance Sheet

March 31, 2022

	General Fund	*Capital Reserve Fund*	*Debt Service Fund*	*Capital Projects Fund*	*Totals Governmental Funds*
Assets:					
Cash:					
Operating Account	$ 1,015,788	$ -	$ -	$ -	$ 1,015,788
Debit Card	$ 2,479	$ -	$ -	$ -	$ 2,479
Investments:					
State Board Administration	$ -	$ 328,323	$ -	$ -	$ 328,323
Series 2012					
Reserve	$ -	$ -	$ 401,053	$ -	$ 401,053
Revenue	$ -	$ -	$ 502,586	$ -	$ 502,586
Interest	$ -	$ -	$ 0	$ -	$ 0
Prepayment	$ -	$ -	$ 0	$ -	$ 0
Sinking Fund	$ -	$ -	$ 17	$ -	$ 17
Series 2015					
Reserve	$ -	$ -	$ 596,097	$ -	$ 596,097
Revenue	$ -	$ -	$ 665,932	$ -	$ 665,932
Interest	$ -	$ -	$ 11	$ -	$ 11
Prepayment	$ -	$ -	$ 1,877	$ -	$ 1,877
Construction	$ -	$ -	$ -	$ 437	$ 437
Series 2018					
Reserve	$ -	$ -	$ 58,840	$ -	$ 58,840
Revenue	$ -	$ -	$ 116,835	$ -	$ 116,835
Interest	$ -	$ -	$ 0	$ -	$ 0
Capital Interest	$ -	$ -	$ 2,539	$ -	$ 2,539
Construction	$ -	$ -	$ -	$ 48	$ 48
Cost of Issuance	$ -	$ -	$ -	$ 7	$ 7
Due from Colonial Properties	$ 7,940	$ -	$ -	$ -	$ 7,940
Due from Capital Reserve	$ 3,690	$ -	$ -	$ -	$ 3,690
Due from General Fund	$ -	$ -	$ 41,404	$ -	$ 41,404
Prepaid Expenses	$ 2,263	$ -	$ -	$ -	$ 2,263
Total Assets	**$ 1,032,161**	**$ 328,323**	**$ 2,387,192**	**$ 491**	**$ 3,748,167**
Liabilities:					
Accounts Payable	$ 29,383	$ -	$ -	$ -	$ 29,383
Due to Debt Service	$ 41,404	$ -	$ -	$ -	$ 41,404
Due to General Fund	$ -	$ 3,690	$ -	$ -	$ 3,690
Total Liabilites	**$ 70,787**	**$ 3,690**	**$ -**	**$ -**	**$ 74,477**
Fund Balance:					
Assigned for:					
Capital Reserves	$ -	$ 324,633	$ -	$ -	$ 324,633
Nonspendable:					
Deposits and Prepaid Items	$ 2,263	$ -	$ -	$ -	$ 2,263
Restricted for:					
Debt Service 2012	$ -	$ -	$ 918,662	$ -	$ 918,662
Debt Service 2015	$ -	$ -	$ 1,285,904	$ -	$ 1,285,904
Debt Service 2018	$ -	$ -	$ 182,626	$ -	$ 182,626
Capital Projects - Series 2015	$ -	$ -	$ -	$ 437	$ 437
Capital Projects - Series 2018	$ -	$ -	$ -	$ 55	$ 55
Unassigned	$ 959,111	$ -	$ -	$ -	$ 959,111
Total Fund Balances	**$ 961,374**	**$ 324,633**	**$ 2,387,192**	**$ 491**	**$ 3,673,690**
Total Liabilities & Fund Balance	$ 1,032,161	$ 328,323	$ 2,387,192	$ 491	$ 3,748,167

Randal Park

Community Development District

General Fund

Statement of Revenues, Expenditures, and Changes in Fund Balance

For The Period Ending March 31, 2022

	Adopted Budget	Prorated Budget Thru 03/31/22	Actual Thru 03/31/22	Variance
Revenues:				
Special Assessments	$ 963,338	$ 934,517	$ 934,517	$ -
Colonial Properties Contribution	$ 46,332	$ 23,166	$ 23,774	$ 608
Miscellaneous Revenue	$ 1,000	$ 500	$ 688	$ 188
Activities	$ 7,000	$ 1,077	$ 1,077	$ -
Rentals	$ 7,000	$ 7,000	$ 10,750	$ 3,750
Total Revenues	**$ 1,024,670**	**$ 966,260**	**$ 970,805**	**$ 4,546**
Expenditures:				
General & Administrative:				
Supervisor Fees	$ 12,000	$ 6,000	$ 4,200	$ 1,800
FICA Expense	$ 900	$ 450	$ 321	$ 129
Annual Audit	$ 4,400	$ 4,400	$ 4,400	$ -
Trustee Fees	$ 12,500	$ 4,000	$ 4,000	$ -
Dissemination Agent	$ 10,500	$ 5,250	$ 5,250	$ -
Arbitrage	$ 1,800	$ -	$ -	$ -
Engineering	$ 10,000	$ 5,000	$ 190	$ 4,810
Attorney	$ 20,000	$ 10,000	$ 6,014	$ 3,986
Assessment Administration	$ 5,000	$ 5,000	$ 5,000	$ -
Management Fees	$ 41,792	$ 20,896	$ 20,896	$ 0
Information Technology	$ 1,400	$ 700	$ 700	$ (0)
Website Maintenance	$ 1,200	$ 600	$ 600	$ -
Telephone	$ 100	$ 50	$ -	$ 50
Postage	$ 650	$ 325	$ 194	$ 131
Insurance	$ 5,834	$ 5,834	$ 5,490	$ 344
Printing & Binding	$ 2,150	$ 1,075	$ 291	$ 784
Legal Advertising	$ 2,250	$ 1,125	$ -	$ 1,125
Other Current Charges	$ 1,700	$ 850	$ 278	$ 572
Office Supplies	$ 200	$ 100	$ 5	$ 95
Property Appraiser	$ 800	$ 800	$ -	$ 800
Property Taxes	$ 250	$ 250	$ 286	$ (36)
Dues, Licenses & Subscriptions	$ 175	$ 175	$ 175	$ -
Subtotal General & Administrative	**$ 135,601**	**$ 72,880**	**$ 58,290**	**$ 14,590**
Operations & Maintenance				
Contract Services:				
Field Management	$ 17,912	$ 8,956	$ 8,956	$ (0)
Wetland Maintenance	$ 9,600	$ 4,800	$ -	$ 4,800
Mitigation Monitoring	$ 2,500	$ 2,500	$ 9,600	$ (7,100)
Landscape Maintenance	$ 288,264	$ 144,132	$ 144,077	$ 55
Lake Maintenance	$ 9,600	$ 4,800	$ 4,200	$ 600
Security Patrol	$ 36,400	$ 18,200	$ 9,654	$ 8,546
Repairs & Maintenance				
Facility Maintenance	$ 29,120	$ 14,560	$ 14,755	$ (195)
Repairs & Maintenance	$ 11,000	$ 9,519	$ 9,519	$ -
Operating Supplies	$ 9,800	$ 4,900	$ 2,725	$ 2,175
Landscape Replacement	$ 10,500	$ 10,063	$ 10,063	$ -
Irrigation Repairs	$ 10,000	$ 5,000	$ 1,003	$ 3,997
Alley Maintenance	$ 1,500	$ 750	$ -	$ 750
Stormwater Repairs & Maintenance	$ 1,500	$ 750	$ -	$ 750
Fountain Maintenance	$ 3,500	$ 1,750	$ 1,220	$ 530
Sign Maintenance	$ 1,000	$ 500	$ 199	$ 301
Pressure Washing	$ 5,700	$ 5,700	$ 8,350	$ (2,650)

Randal Park

Community Development District

General Fund

Statement of Revenues, Expenditures, and Changes in Fund Balance

For The Period Ending March 31, 2022

	Adopted Budget	Prorated Budget Thru 03/31/22	Actual Thru 03/31/22	Variance
Utilities				
Utilities - Common Area	$ 30,000	$ 15,000	$ 9,331	$ 5,669
Streetlighting	$ 110,000	$ 55,000	$ 50,880	$ 4,120
Amenity Center				
Amenity Management	$ 79,441	$ 39,721	$ 39,720	$ 0
Pool Attendants	$ 15,600	$ -	$ -	$ -
Pool Permit	$ 550	$ -	$ -	$ -
Cable TV/Internet/Telephone	$ 4,000	$ 2,000	$ 1,725	$ 275
Utilities - Amenity Center	$ 21,000	$ 10,500	$ 7,765	$ 2,735
Refuse Service	$ 2,400	$ 1,200	$ 1,283	$ (83)
Amenity Center Access Cards	$ 1,000	$ 500	$ -	$ 500
HVAC Maintenance	$ 574	$ 287	$ -	$ 287
Special Events	$ 13,962	$ 10,082	$ 10,082	$ -
Holiday Decorations	$ 4,410	$ 4,410	$ 8,179	$ (3,769)
Security Monitoring	$ 600	$ 600	$ 2,412	$ (1,812)
Janitorial Services	$ 16,000	$ 8,000	$ 9,668	$ (1,668)
Pool Maintenance	$ 15,330	$ 7,665	$ 7,278	$ 387
Pool Repairs & Maintenance	$ 3,200	$ 1,600	$ 1,477	$ 123
Fitness Repairs & Maintenance	$ 5,000	$ 2,500	$ 1,681	$ 819
Amenity Repairs & Maintenance	$ 1,480	$ 740	$ -	$ 740
Pest Control	$ 650	$ 325	$ 300	$ 25
Other				
Property Insurance	$ 36,925	$ 36,925	$ 34,743	$ 2,182
Contingency	$ 4,625	$ 2,313	$ 1,731	$ 582
Subtotal Operations & Maintenance	**$ 814,643**	**$ 436,247**	**$ 412,577**	**$ 23,670**
Total Expenditures	**$ 950,244**	**$ 509,127**	**$ 470,867**	**$ 38,260**
Excess (Deficiency) of Revenues over Expenditures	$ 74,426		$ 499,939	
Other Financing Sources/(Uses):				
Transfer In/(Out) - Capital Reserve	$ (74,426)	$ -	$ -	$ -
Total Other Financing Sources/(Uses)	**$ (74,426)**	**$ -**	**$ -**	**$ -**
Net Change in Fund Balance	**$ -**		**$ 499,939**	
Fund Balance - Beginning	$ -		$ 461,435	
Fund Balance - Ending	$ -		$ 961,374	

Randal Park

Community Development District

Capital Reserve Fund

Statement of Revenues, Expenditures, and Changes in Fund Balance

For The Period Ending March 31, 2022

	Adopted Budget	Prorated Budget Thru 03/31/22	Actual Thru 03/31/22	Variance
Revenues				
Interest	$ 500	$ 250	$ 281	$ 31
Total Revenues	**$ 500**	**$ 250**	**$ 281**	**$ 31**
Expenditures:				
Capital Outlay	$ 25,000	$ 23,116	$ 23,116	$ -
Walking Path Repair	$ 75,000	$ -	$ -	$ -
Splash Pad	$ 18,000	$ 18,000	$ 17,062	$ 938
Pergola staining/repairs	$ 10,000	$ -	$ -	$ -
Painting Parking lot fencing	$ 3,500	$ -	$ -	$ -
Fountain	$ 20,000	$ 4,584	$ 4,584	$ -
Total Expenditures	**$ 151,500**	**$ 45,700**	**$ 44,762**	**$ 938**
Excess (Deficiency) of Revenues over Expenditures	**$ (151,000)**		**$ (44,481)**	
Other Financing Sources/(Uses)				
Transfer In/(Out)	$ 74,426	$ -	$ -	$ -
Total Other Financing Sources (Uses)	**$ 74,426**	**$ -**	**$ -**	**$ -**
Net Change in Fund Balance	**$ (76,574)**		**$ (44,481)**	
Fund Balance - Beginning	**$ 377,198**		**$ 369,114**	
Fund Balance - Ending	**$ 300,624**		**$ 324,633**	

Randal Park

Community Development District

Debt Service Fund Series 2012

Statement of Revenues, Expenditures, and Changes in Fund Balance

For The Period Ending March 31, 2022

	Adopted Budget	Prorated Budget Thru 03/31/22	Actual Thru 03/31/22	Variance
Revenues:				
Assessments	$ 397,350	$ 388,215	$ 388,215	$ -
Interest	$ 100	$ 50	$ 35	$ (15)
Total Revenues	**$ 397,450**	**$ 388,265**	**$ 388,250**	**$ (15)**
Expenditures:				
Principal Payment - 11/01	$ 90,000	$ 90,000	$ 90,000	$ -
Interest Payment - 11/01	$ 146,856	$ 146,856	$ 146,856	$ -
Interest Payment - 05/01	$ 144,269	$ -	$ -	$ -
Total Expenditures	**$ 381,125**	**$ 236,856**	**$ 236,856**	**$ -**
Excess (Deficiency) of Revenues over Expenditures	$ 16,325		$ 151,394	
Fund Balance - Beginning	$ 361,874		$ 767,268	
Fund Balance - Ending	$ 378,199		$ 918,662	

Randal Park

Community Development District

Debt Service Fund Series 2015

Statement of Revenues, Expenditures, and Changes in Fund Balance

For The Period Ending March 31, 2022

	Adopted Budget	Prorated Budget Thru 03/31/22	Actual Thru 03/31/22	Variance
Revenues:				
Assessments	$ 596,080	$ 568,828	$ 568,828	$ -
Interest	$ 125	$ 63	$ 48	$ (14)
Total Revenues	**$ 596,205**	**$ 568,891**	**$ 568,877**	**$ (14)**
Expenditures:				
Principal Payment - 11/01	$ 170,000	$ 170,000	$ 170,000	$ -
Interest Payment - 11/01	$ 206,803	$ 206,803	$ 206,696	$ 106
Special Call - 02/01	$ -	$ -	$ 5,000	$ (5,000)
Interest Payment - 02/01	$ -	$ -	$ 53	$ (53)
Interest Payment - 05/01	$ 203,190	$ -	$ -	$ -
Total Expenditures	**$ 579,993**	**$ 376,803**	**$ 381,749**	**$ (4,947)**
Excess (Deficiency) of Revenues over Expenditures	$ 16,213		$ 187,127	
Fund Balance - Beginning	$ 491,475		$ 1,098,776	
Fund Balance - Ending	$ 507,687		$ 1,285,904	

Randal Park

Community Development District

Debt Service Fund Series 2018

Statement of Revenues, Expenditures, and Changes in Fund Balance

For The Period Ending March 31, 2022

	Adopted Budget	Prorated Budget Thru 03/31/22	Actual Thru 03/31/22	Variance
Revenues:				
Assessments	$ 117,674	$ 114,158	$ 114,158	$ -
Interest	$ 50	$ 25	$ 5	$ (20)
Total Revenues	**$ 117,724**	**$ 114,183**	**$ 114,163**	**$ (20)**
Expenditures:				
Interest Payment - 11/01	$ 42,913	$ 42,913	$ 42,913	$ -
Principal Payment - 05/01	$ 30,000	$ -	$ -	$ -
Interest Payment - 05/01	$ 42,913	$ -	$ -	$ -
Total Expenditures	**$ 115,825**	**$ 42,913**	**$ 42,913**	**$ -**
Excess (Deficiency) of Revenues over Expenditures	$ 1,899		$ 71,250	
Fund Balance - Beginning	$ 51,236		$ 111,376	
Fund Balance - Ending	$ 53,135		$ 182,626	

Randal Park

Community Development District

Combined Capital Project Funds

Statement of Revenues, Expenditures, and Changes in Fund Balance

For The Period Ending March 31, 2022

	Series 2015	Series 2018	Total
Revenues			
Interest	$ 0	$ -	$ 0
Total Revenues	**$ 0**	**$ -**	**$ 0**
Expenditures:			
Capital Outlay	$ -	$ -	$ -
Total Expenditures	**$ -**	**$ -**	**$ -**
Excess (Deficiency) of Revenues over Expenditures	**$ 0**	**$ -**	**$ 0**
Fund Balance - Beginning	**$ 437**	**$ 55**	**$ 491**
Fund Balance - Ending	**$ 437**	**$ 55**	**$ 491**

Randal Park

Community Development District

Month to Month

	Oct	Nov	Dec	Jan	Feb	March	April	May	June	July	Aug	Sept	Total
Revenues:													
Special Assessments	$ -	$ 59,368	$ 187,780	$ 565,609	$ 105,020	$ 16,739	$ -	$ -	$ -	$ -	$ -	$ -	$ 934,517
Colonial Properties Contribution	$ 4,003	$ 3,911	$ 3,916	$ 4,003	$ 3,960	$ 3,980	$ -	$ -	$ -	$ -	$ -	$ -	$ 23,774
Miscellaneous Revenue	$ 110	$ 250	$ 35	$ 88	$ 45	$ 160	$ -	$ -	$ -	$ -	$ -	$ -	$ 688
Activities	$ -	$ -	$ -	$ -	$ 690	$ 387	$ -	$ -	$ -	$ -	$ -	$ -	$ 1,077
Rentals	$ 1,500	$ -	$ 1,500	$ 2,250	$ 1,500	$ 4,000	$ -	$ -	$ -	$ -	$ -	$ -	$ 10,750
Total Revenues	**$ 5,613**	**$ 63,529**	**$ 193,231**	**$ 571,951**	**$ 111,215**	**$ 25,266**	**$ -**	**$ -**	**$ -**	**$ -**	**$ -**	**$ -**	**$ 970,805**
Expenditures:													
General & Administrative:													
Supervisor Fees	$ 600	$ 800	$ 800	$ 800	$ 600	$ 600	$ -	$ -	$ -	$ -	$ -	$ -	$ 4,200
FICA Expense	$ 46	$ 61	$ 61	$ 61	$ 46	$ 46	$ -	$ -	$ -	$ -	$ -	$ -	$ 321
Annual Audit	$ -	$ -	$ -	$ -	$ 4,400	$ -	$ -	$ -	$ -	$ -	$ -	$ -	$ 4,400
Trustee Fees	$ -	$ -	$ 4,000	$ -	$ -	$ -	$ -	$ -	$ -	$ -	$ -	$ -	$ 4,000
Dissemination Agent	$ 875	$ 875	$ 875	$ 875	$ 875	$ 875	$ -	$ -	$ -	$ -	$ -	$ -	$ 5,250
Arbitrage	$ -	$ -	$ -	$ -	$ -	$ -	$ -	$ -	$ -	$ -	$ -	$ -	$ -
Engineering	$ -	$ 190	$ -	$ -	$ -	$ -	$ -	$ -	$ -	$ -	$ -	$ -	$ 190
Attorney	$ 1,138	$ 1,477	$ 799	$ 1,254	$ 1,345	$ -	$ -	$ -	$ -	$ -	$ -	$ -	$ 6,014
Assessment Administration	$ 5,000	$ -	$ -	$ -	$ -	$ -	$ -	$ -	$ -	$ -	$ -	$ -	$ 5,000
Management Fees	$ 3,483	$ 3,483	$ 3,483	$ 3,483	$ 3,483	$ 3,483	$ -	$ -	$ -	$ -	$ -	$ -	$ 20,896
Information Technology	$ 117	$ 117	$ 117	$ 117	$ 117	$ 117	$ -	$ -	$ -	$ -	$ -	$ -	$ 700
Website Maintenance	$ 100	$ 100	$ 100	$ 100	$ 100	$ 100	$ -	$ -	$ -	$ -	$ -	$ -	$ 600
Telephone	$ -	$ -	$ -	$ -	$ -	$ -	$ -	$ -	$ -	$ -	$ -	$ -	$ -
Postage	$ 65	$ 0	$ 17	$ 11	$ 51	$ 50	$ -	$ -	$ -	$ -	$ -	$ -	$ 194
Insurance	$ 5,490	$ -	$ -	$ -	$ -	$ -	$ -	$ -	$ -	$ -	$ -	$ -	$ 5,490
Printing & Binding	$ 61	$ 64	$ 26	$ 49	$ 44	$ 47	$ -	$ -	$ -	$ -	$ -	$ -	$ 291
Legal Advertising	$ -	$ -	$ -	$ -	$ -	$ -	$ -	$ -	$ -	$ -	$ -	$ -	$ -
Other Current Charges	$ 44	$ 37	$ 45	$ 48	$ 73	$ 32	$ -	$ -	$ -	$ -	$ -	$ -	$ 278
Office Supplies	$ 1	$ 0	$ 1	$ 1	$ 1	$ 1	$ -	$ -	$ -	$ -	$ -	$ -	$ 5
Property Appraiser	$ -	$ -	$ -	$ -	$ -	$ -	$ -	$ -	$ -	$ -	$ -	$ -	$ -
Property Taxes	$ -	$ 38	$ -	$ 248	$ -	$ -	$ -	$ -	$ -	$ -	$ -	$ -	$ 286
Dues, Licenses & Subscriptions	$ 175	$ -	$ -	$ -	$ -	$ -	$ -	$ -	$ -	$ -	$ -	$ -	$ 175
Subtotal General & Administrative	**$ 17,194**	**$ 7,242**	**$ 10,323**	**$ 7,045**	**$ 11,134**	**$ 5,351**	**$ -**	**$ -**	**$ -**	**$ -**	**$ -**	**$ -**	**$ 58,290**
Operations & Maintenance													
Contract Services:													
Field Management	$ 1,493	$ 1,493	$ 1,493	$ 1,493	$ 1,493	$ 1,493	$ -	$ -	$ -	$ -	$ -	$ -	$ 8,956
Wetland Maintenance	$ -	$ -	$ -	$ -	$ -	$ -	$ -	$ -	$ -	$ -	$ -	$ -	$ -
Mitigation Monitoring	$ 4,800	$ -	$ -	$ 4,800	$ -	$ -	$ -	$ -	$ -	$ -	$ -	$ -	$ 9,600
Landscape Maintenance	$ 24,013	$ 24,013	$ 24,013	$ 24,013	$ 24,013	$ 24,013	$ -	$ -	$ -	$ -	$ -	$ -	$ 144,077
Lake Maintenance	$ 840	$ 840	$ 840	$ 840	$ 840	$ -	$ -	$ -	$ -	$ -	$ -	$ -	$ 4,200
Security Patrol	$ 1,462	$ 1,392	$ -	$ 1,786	$ 2,198	$ 2,816	$ -	$ -	$ -	$ -	$ -	$ -	$ 9,654
Repairs & Maintenance													
Facility Maintenance	$ 2,427	$ 2,427	$ 2,427	$ 2,427	$ 2,622	$ 2,427	$ -	$ -	$ -	$ -	$ -	$ -	$ 14,755
Repairs & Maintenance	$ 3,746	$ 85	$ 835	$ 400	$ 3,507	$ 946	$ -	$ -	$ -	$ -	$ -	$ -	$ 9,519
Operating Supplies	$ 599	$ -	$ 556	$ 602	$ -	$ 968	$ -	$ -	$ -	$ -	$ -	$ -	$ 2,725
Landscape Replacement	$ -	$ 156	$ 6,253	$ 2,945	$ -	$ 709	$ -	$ -	$ -	$ -	$ -	$ -	$ 10,063
Irrigation Repairs	$ 1,003	$ -	$ -	$ -	$ -	$ -	$ -	$ -	$ -	$ -	$ -	$ -	$ 1,003
Alley Maintenance	$ -	$ -	$ -	$ -	$ -	$ -	$ -	$ -	$ -	$ -	$ -	$ -	$ -
Stormwater Repairs & Maintenance	$ -	$ -	$ -	$ -	$ -	$ -	$ -	$ -	$ -	$ -	$ -	$ -	$ -
Fountain Maintenance	$ 295	$ 150	$ 325	$ 150	$ 150	$ 150	$ -	$ -	$ -	$ -	$ -	$ -	$ 1,220
Sign Maintenance	$ -	$ 199	$ -	$ -	$ -	$ -	$ -	$ -	$ -	$ -	$ -	$ -	$ 199
Pressure Washing	$ 8,350	$ -	$ -	$ -	$ -	$ -	$ -	$ -	$ -	$ -	$ -	$ -	$ 8,350

Randal Park

Community Development District

Month to Month

	Oct	Nov	Dec	Jan	Feb	March	April	May	June	July	Aug	Sept	Total
Utilities													
Utilities - Common Area	$ 1,226	$ 1,088	$ 1,827	$ 1,864	$ 1,847	$ 1,479	$ -	$ -	$ -	$ -	$ -	$ -	$ 9,331
Streetlighting	$ 8,466	$ 8,466	$ 8,466	$ 8,466	$ 8,509	$ 8,509	$ -	$ -	$ -	$ -	$ -	$ -	$ 50,880
Amenity Center													
Amenity Management	$ 6,620	$ 6,620	$ 6,620	$ 6,620	$ 6,620	$ 6,620	$ -	$ -	$ -	$ -	$ -	$ -	$ 39,720
Pool Attendants	$ -	$ -	$ -	$ -	$ -	$ -	$ -	$ -	$ -	$ -	$ -	$ -	$ -
Pool Permit	$ -	$ -	$ -	$ -	$ -	$ -	$ -	$ -	$ -	$ -	$ -	$ -	$ -
Cable TV/Internet/Telephone	$ 287	$ 287	$ 287	$ 287	$ 287	$ 291	$ -	$ -	$ -	$ -	$ -	$ -	$ 1,725
Utilities - Amenity Center	$ 1,721	$ 1,483	$ 1,123	$ 1,177	$ 1,113	$ 1,148	$ -	$ -	$ -	$ -	$ -	$ -	$ 7,765
Refuse Service	$ 206	$ 214	$ 214	$ 214	$ 221	$ 214	$ -	$ -	$ -	$ -	$ -	$ -	$ 1,283
Amenity Center Access Cards	$ -	$ -	$ -	$ -	$ -	$ -	$ -	$ -	$ -	$ -	$ -	$ -	$ -
HVAC Maintenance	$ -	$ -	$ -	$ -	$ -	$ -	$ -	$ -	$ -	$ -	$ -	$ -	$ -
Special Events	$ 1,695	$ 605	$ 7,220	$ -	$ -	$ 563	$ -	$ -	$ -	$ -	$ -	$ -	$ 10,082
Holiday Decorations	$ 8,179	$ -	$ -	$ -	$ -	$ -	$ -	$ -	$ -	$ -	$ -	$ -	$ 8,179
Security Monitoring	$ 927	$ 155	$ 155	$ 865	$ 155	$ 155	$ -	$ -	$ -	$ -	$ -	$ -	$ 2,412
Janitorial Services	$ 1,532	$ 1,859	$ 1,593	$ 2,031	$ 1,423	$ 1,230	$ -	$ -	$ -	$ -	$ -	$ -	$ 9,668
Pool Maintenance	$ 1,278	$ 1,350	$ 1,350	$ 1,350	$ 1,350	$ 600	$ -	$ -	$ -	$ -	$ -	$ -	$ 7,278
Pool Repairs & Maintenance	$ 252	$ 252	$ -	$ 252	$ -	$ 721	$ -	$ -	$ -	$ -	$ -	$ -	$ 1,477
Fitness Repairs & Maintenance	$ -	$ -	$ 175	$ -	$ 230	$ 1,276	$ -	$ -	$ -	$ -	$ -	$ -	$ 1,681
Amenity Repairs & Maintenance	$ -	$ -	$ -	$ -	$ -	$ -	$ -	$ -	$ -	$ -	$ -	$ -	$ -
Pest Control	$ 50	$ 50	$ 50	$ 50	$ 50	$ 50	$ -	$ -	$ -	$ -	$ -	$ -	$ 300
Other													
Property Insurance	$ 34,743	$ -	$ -	$ -	$ -	$ -	$ -	$ -	$ -	$ -	$ -	$ -	$ 34,743
Contingency	$ -	$ -	$ 1,250	$ 481	$ -	$ -	$ -	$ -	$ -	$ -	$ -	$ -	$ 1,731
Subtotal Operations & Maintenance	**$ 116,209**	**$ 53,182**	**$ 67,070**	**$ 63,112**	**$ 56,627**	**$ 56,377**	**$ -**	**$ -**	**$ -**	**$ -**	**$ -**	**$ -**	**$ 412,577**
Total Expenditures	**$ 133,403**	**$ 60,424**	**$ 77,393**	**$ 70,157**	**$ 67,761**	**$ 61,728**	**$ -**	**$ -**	**$ -**	**$ -**	**$ -**	**$ -**	**$ 470,867**
Excess Revenues (Expenditures)	$ (127,790)	$ 3,105	$ 115,839	$ 501,793	$ 43,454	$ (36,462)	$ -	$ -	$ -	$ -	$ -	$ -	$ 499,939
Other Financing Sources/Uses:													
Transfer In/(Out) - Capital Reserve	$ -	$ -	$ -	$ -	$ -	$ -	$ -	$ -	$ -	$ -	$ -	$ -	$ -
Total Other Financing Sources/Uses	**$ -**	**$ -**	**$ -**	**$ -**	**$ -**	**$ -**	**$ -**	**$ -**	**$ -**	**$ -**	**$ -**	**$ -**	**$ -**
Net Change in Fund Balance	**$ (127,790)**	**$ 3,105**	**$ 115,839**	**$ 501,793**	**$ 43,454**	**$ (36,462)**	**$ -**	**$ -**	**$ -**	**$ -**	**$ -**	**$ -**	**$ 499,939**

Randal Park
Community Development District
Long Term Debt Report

Series 2012 Special Assessment Bonds	
Interest Rate :	Various
	(5.75% , 6.125% , 6.875%)
Maturity Date :	11/1/2042
Reserve Fund Requirement :	$397,203
Reserve Fund Balance :	$401,053
Bonds Outstanding - 09/30/2013	$5,115,000
Less : November 1, 2013 (Mandatory)	($65,000)
Less : November 1, 2014 (Mandatory)	($70,000)
Less : November 1, 2015 (Mandatory)	($70,000)
Less : November 1, 2016 (Mandatory)	($75,000)
Less : November 1, 2017 (Mandatory)	($80,000)
Less : November 1, 2018 (Mandatory)	($85,000)
Less : November 1, 2019 (Mandatory)	($90,000)
Less : November 1, 2020 (Mandatory)	($95,000)
Less : November 1, 2020 (Special Call)	($15,000)
Less : August 1, 2021 (Special Call)	($5,000)
Less : November 1, 2021 (Mandatory)	($90,000)
Current Bonds Outstanding	**$4,375,000**

Series 2015 Special Assessment Bonds	
Interest Rate :	Various
	(4.25% , 5% , 5.2%)
Maturity Date :	11/1/2045
Reserve Fund Requirement :	$596,080
Reserve Fund Balance :	$596,097
Bonds Outstanding - 03/18/2015	$9,055,000
Less : November 1, 2016 (Mandatory)	($145,000)
Less : November 1, 2017 (Mandatory)	($150,000)
Less : February 1, 2018 (Special Call)	($15,000)
Less : November 1, 2018 (Mandatory)	($155,000)
Less : November 1, 2018 (Special Call)	($20,000)
Less : February 1, 2019 (Special Call)	($20,000)
Less : August 1, 2019 (Special Call)	($5,000)
Less : November 1, 2019 (Mandatory)	($155,000)
Less : November 1, 2020 (Mandatory)	($165,000)
Less : November 1, 2021 (Mandatory)	($170,000)
Less : February 1, 2022 (Special Call)	($5,000)
Current Bonds Outstanding	**$8,050,000**

Series 2018 Special Assessment Bonds	
Interest Rate :	Various
	(4.100% , 4.500% , 5.050%, 5.200%)
Maturity Date :	11/1/2049
Reserve Fund Requirement :	$58,837
Reserve Fund Balance :	$58,840
Bonds Outstanding - 12/17/2018	$1,770,000
Less : May 1, 2020 (Mandatory)	($30,000)
Less : May 1, 2021 (Mandatory)	($30,000)
Current Bonds Outstanding	**$1,710,000**

Randal Park

COMMUNITY DEVELOPMENT DISTRICT

Assessment Receipt Schedule

Fiscal Year 2022

						Gross Assessments	$ 1,024,828.80	$ 425,732.67	$ 623,799.93	$ 125,190.00	$ 2,199,551.40
						Net Assessments	$ 963,339.07	$ 400,188.71	$ 586,371.93	$ 117,678.60	$ 2,067,578.32
				ON ROLL ASSESSMENTS							
							46.59%	19.36%	28.36%	5.69%	100.00%
Date	*Distribution*	*Gross Amount*	*Commissions*	*Discount/Penalty*	*Interest*	*Net Receipts*	*O&M Portion*	*Series 2012 Debt Service*	*Series 2015 Debt Service*	*Series 2018 Debt Service*	*Total*
11/8/21	1	$5,052.95	$0.00	($265.29)	$0.00	$4,787.66	$2,230.69	$926.67	$1,357.80	$272.50	$4,787.66
11/15/21	2	$45,413.12	$0.00	($1,816.54)	$0.00	$43,596.58	$20,312.79	$8,438.31	$12,364.13	$2,481.35	$43,596.58
11/22/21	3	$82,329.13	$0.00	($3,293.19)	$0.00	$79,035.94	$36,824.92	$15,297.75	$22,414.85	$4,498.42	$79,035.94
12/06/21	4	$141,596.03	$0.00	($5,663.73)	$0.00	$135,932.30	$63,334.44	$26,310.28	$38,550.84	$7,736.74	$135,932.30
12/13/21	5	$222,025.43	$0.00	($8,881.10)	$0.00	$213,144.33	$99,309.54	$41,255.01	$60,448.43	$12,131.35	$213,144.33
12/20/21	6	$56,168.09	$0.00	($2,246.78)	$27.46	$53,948.77	$25,136.14	$10,442.02	$15,300.05	$3,070.56	$53,948.77
01/14/22	7	$1,264,527.48	$0.00	($50,581.51)	$0.00	$1,213,945.97	$565,609.33	$234,964.49	$344,279.02	$69,093.13	$1,213,945.97
02/14/22	8	$191,460.26	$0.00	($7,658.48)	$0.00	$183,801.78	$85,638.08	$35,575.63	$52,126.78	$10,461.29	$183,801.78
02/23/22	9	$43,303.24	$0.00	($1,703.86)	$0.00	$41,599.38	$19,382.24	$8,051.74	$11,797.72	$2,367.68	$41,599.38
03/14/22	10	$37,783.61	($668.06)	($1,402.78)	$212.81	$35,925.58	$16,738.67	$6,953.55	$10,188.61	$2,044.75	$35,925.58
	TOTAL	**$ 2,089,659.34**	**$ (668.06)**	**$ (83,513.26)**	**$ 240.27**	**$ 2,005,718.29**	**$ 934,516.84**	**$ 388,215.45**	**$ 568,828.23**	**$ 114,157.77**	**$ 2,005,718.29**

97%	**Net Percent Collected**
$61,860.03	**Balance Remaining to Collect**

SECTION 3

SECTION i

Proposal #197835
Date: 03/29/2022
From: Lathan Smith

Proposal For

Randal Park CDD
c/o GMS-CF, LLC
6200 Lee Vista Blvd, Suite 300
Orlando, FL 32822

main: 407-451-4047
mobile:
wviasalyers@gmscfl.com

Location

Randall Park Blvd
Orlando, FL 32832

Property Name: Randal Park CDD

Sylvester Palm Tree Enhancement Service

Terms: Net 30

DESCRIPTION	QUANTITY	UNIT PRICE	AMOUNT
Palm teratment	49.00	$47.95	$2,349.38

Client Notes

Granular Fertilize as well as Root and Crown drench with Liquid Fertilizer, Fungicide and Insecticide to green up struggling Sylvester palms throughout the property

SUBTOTAL	$2,349.38
SALES TAX	$0.00
TOTAL	$2,349.38

Signature

x

Signature above authorizes Yellowstone Landscape to perform work as described above and verifies that the prices and specifications are hereby accepted. All overdue balances will be charge a 1.5% a month, 18% annual percentage rate.
Limited Warranty: All plant material is under a limited warranty for one year. Transplanted plant material and/or plant material that dies due to conditions out of Yellowstone Landscape's control (i.e. Acts of God, vandalism, inadequate irrigation due to water restrictions, etc.) shall not be included in the warranty.

Contact

Print Name: _____

Title: _____

Date: _____

Assigned To

Lathan Smith
Office:
lsmith@yellowstonelandscape.com

Proposal #198601
Date: 03/29/2022
From: Lathan Smith

Proposal For

Randal Park CDD
c/o GMS-CF, LLC
6200 Lee Vista Blvd, Suite 300
Orlando, FL 32822

main: 407-451-4047
mobile:
wviasalyers@gmscfl.com

Location

Randall Park Blvd
Orlando, FL 32832

Property Name: Randal Park CDD

Randal Park Cdd South Side of Club House

Terms: Net 30

DESCRIPTION	QUANTITY	UNIT PRICE	AMOUNT
General Labor	16.00	$58.00	$928.00
Saw Palmetto, 3 GAL	35.00	$25.00	$875.00
Walters vibernum, 3 GAL	15.00	$17.00	$255.00
Chocolate Mulch	40.00	$6.25	$250.00

Client Notes
Remove the patch of dead or dying Walters Vibernum on south end of building outside of the fence and replace with 3 gallon Saw Palmetto. Replace the dead Walters Vibernum inside fence around palm tree. Install chocolate mulch.

SUBTOTAL	$2,308.00
SALES TAX	$0.00
TOTAL	$2,308.00

Signature

x

Signature above authorizes Yellowstone Landscape to perform work as described above and verifies that the prices and specifications are hereby accepted. All overdue balances will be charge a 1.5% a month, 18% annual percentage rate.
Limited Warranty: All plant material is under a limited warranty for one year. Transplanted plant material and/or plant material that dies due to conditions out of Yellowstone Landscape's control (i.e. Acts of God, vandalism, inadequate irrigation due to water restrictions, etc.) shall not be included in the warranty.

Contact

Print Name: _____

Title: _____

Date: _____

Assigned To

Lathan Smith

Office:
lsmith@yellowstonelandscape.com

Proposal #147723
Date: 03/29/2022
From: Lathan Smith

Proposal For

Randal Park CDD
c/o GMS-CF, LLC
6200 Lee Vista Blvd, Suite 300
Orlando, FL 32822

main: 407-451-4047
mobile:
wviasalyers@gmscfl.com

Location

Randall Park Blvd
Orlando, FL 32832

Property Name: Randal Park CDD

Amenity Center Jasmine Replacement with Sod

Terms: Net 30

DESCRIPTION	QUANTITY	UNIT PRICE	AMOUNT
Sod Installation (Sub)	600.00	$1.22	$731.53
General Labor	1.00	$58.00	$58.00

Client Notes

Remove weak dying Jasmine and replace with Zoysia sod to clean up look along front of Amenity Center.

SUBTOTAL	$789.53
SALES TAX	$0.00
TOTAL	$789.53

Signature

x

Signature above authorizes Yellowstone Landscape to perform work as described above and verifies that the prices and specifications are hereby accepted. All overdue balances will be charge a 1.5% a month, 18% annual percentage rate.
Limited Warranty: All plant material is under a limited warranty for one year. Transplanted plant material and/or plant material that dies due to conditions out of Yellowstone Landscape's control (i.e. Acts of God, vandalism, inadequate irrigation due to water restrictions, etc.) shall not be included in the warranty.

Contact

Print Name: _____

Title: _____

Date: _____

Assigned To

Lathan Smith
Office:
lsmith@yellowstonelandscape.com

SECTION ii

Hanging Cantilever Hip Shade

Length	30	**Width**	15	**Entry Height**	8
Peak Height	11.03	**Elbow**	Glide	**Column Mount**	Base Plate
Column Size	8080.25	**Rafter Size**	3.511	**Ridge Size**	3.511
Column Length	9.5	**Rafter Length**	10.6637693	**Ridge Length**	16.1013512

Dome Qty: 1 **Column Qty:** 2

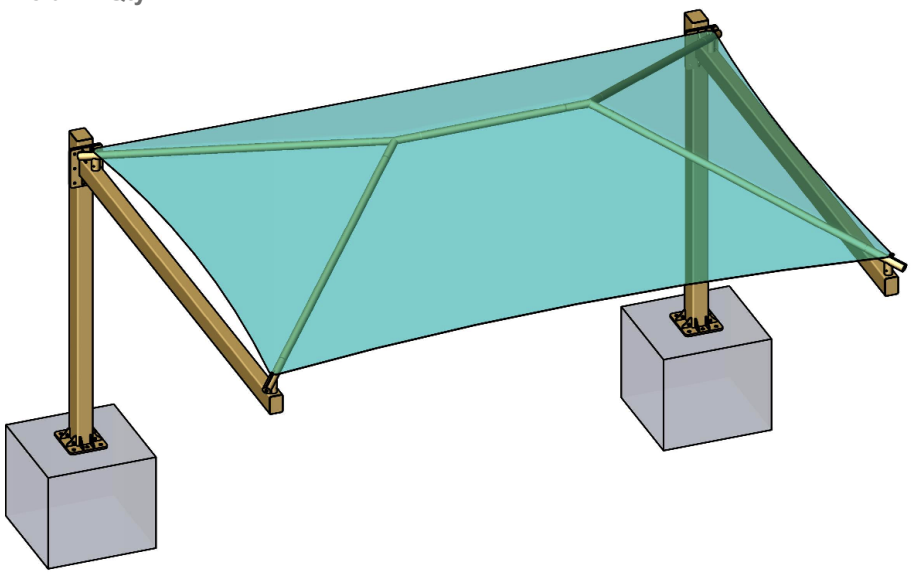

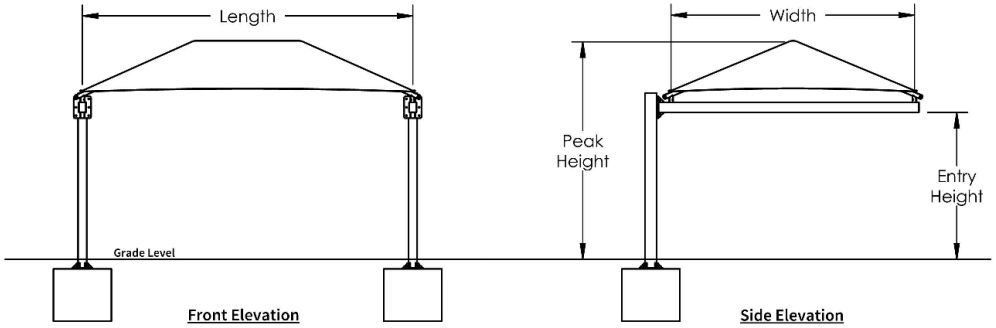

Square Footing		
Column	Length & Width	Depth
Single Cap	4.17	3
Double Cap	N/A	3

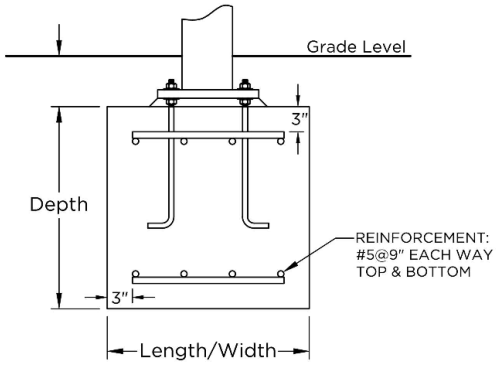

Auger Footing		
Diameter	Single Cap Depth	Double Cap Depth
1'-6"		
2'-0"	Out of range	N/A
2'-6"	Out of range	N/A
3'-0"	5.91	N/A

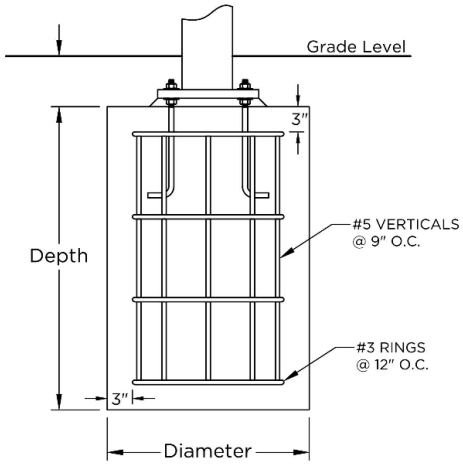

SHADE	QUOTE	SHADE SIZE	SHADE STYLE	
	QUO0239173A	30 X 15	**Hanging Cantilever Hip Shade**	*These drawings are for reference only and should not be used as construction details. They show the general character and rough dimensions of the structural features. Exact spans, fasteners, materials, and foundations can be determined by a licensed professional engineer upon request. Estimated footing size above is based on 1,500 PSF soil bearing pressure.*

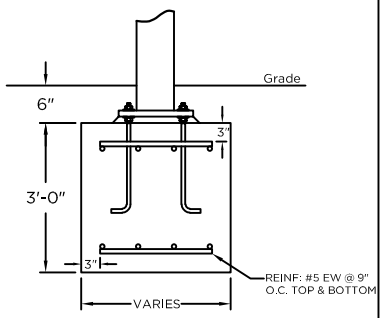

Footer Detail

FOUNDATION NOTE: ALL FOUNDATION SIZES ARE ESTIMATIONS ONLY ACTUAL SIZING SHOULD BE DETERMINED BY A LOCALLY QUALIFIED STRUCTURAL ENGINEER PRIOR TO INSTALLATION.

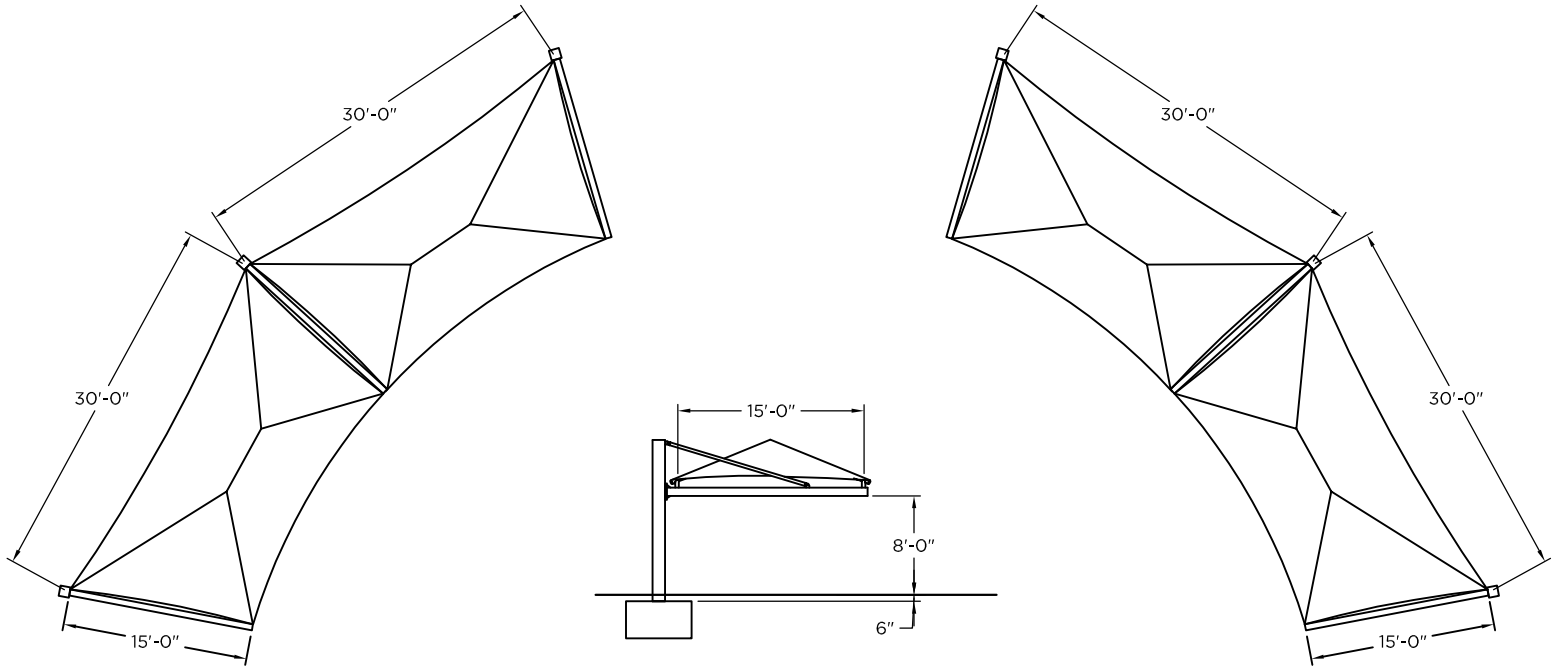

ESTIMATED FOOTINGS: 4.6' X 4.6' X 3'

SHADE

PROJECT NAME		DATE	DRAWN BY
ORLANDO CURVED CANTILEVER		**4/1/2022**	**JSJ**
QUOTE	TITLE	SCALE	SHEET
QUO0239173	**Proposal**	**Not to Scale**	**1 of 1**

These drawings are for reference only and should not be used as construction details. They show the general character and rough dimensions of the structural features. Superior Recreation Products is not responsible for deviation of final shade dimensions. All final dimensions must be verified in the field by the customer. Exact spans, fasteners, materials, and foundations can be determined by a licensed professional engineer upon request.

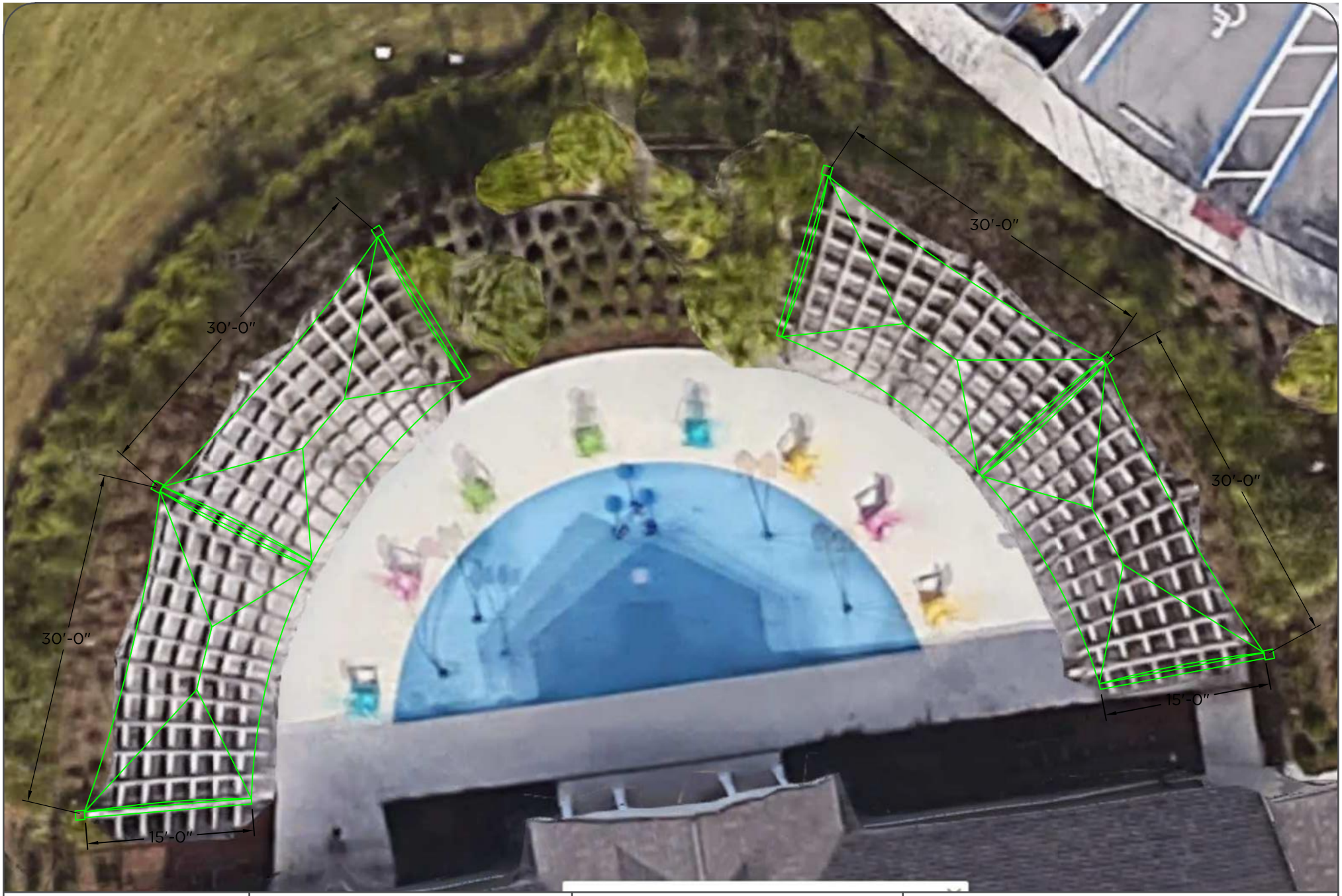

SHADE

PROJECT NAME		DATE	DRAWN BY
ORLANDO CURVED CANTILEVER		**4/1/2022**	**JSJ**
QUOTE	TITLE	SCALE	SHEET
QUO0239173	**Proposal**	**Not to Scale**	**1 of 1**

These drawings are for reference only and should not be used as construction details. They show the general character and rough dimensions of the structural features. Superior Recreation Products is not responsible for deviation of final shade dimensions. All final dimensions must be verified in the field by the customer. Exact spans, fasteners, materials, and foundations can be determined by a licensed professional engineer upon request.

TRUST *the* EXPERTS

For over a decade, our customers have entrusted us to provide safe and affordable playground and recreational equipment. Our team of Certified General Contractors and Playground Safety Inspectors will insure that your project is completed to perfection, providing truly turnkey service, with every step of the process from planning and budgeting, through the installation being handled under one roof.

PRO PLAYGROUNDS

The Play & Recreation Experts

1-800-573-7529 | www.proplaygrounds.com

PRO PLAYGROUNDS
The Play & Recreation Experts

Pro Playgrounds
8490 Cabin Hill Road
Tallahassee, FL 32311

Quote

Date	Estimate #
4/4/2022	15008

Project Name
2022 Shades

IPEMA CERTIFIED TO ASTM F1292 · IPEMA CERTIFIED TO ASTM F2075 · IPEMA CERTIFIED TO ASTM F1487

100% GUARANTEE BEST PRICE 100% GUARANTEE

WE WILL BEAT ANY PRICE BY 5%!

Customer / Bill To	Ship To
Randal Park HOA Logan Smith 8730 Randal Park Blvd Orlando, FL 32832	Randal Park HOA Logan Smith 8730 Randal Park Blvd Orlando, FL 32832

Item	Description	Qty	Cost	Total:
	Furnish labor and materials to: 1. Install 1x 30'x15'x8' hanging cantilever shade. 2. Install 2x 60'x15'x8' multi dome suspended cantilever shades.			
	SHADE STRUCTURES			
CSSD	Custom Shade Design - Rectangle Hanging Cantilever Shade: 30' Length x 15' Width x 8' Entry Height. (2) Columns on Base Plates + 6" surfacing at 8"x8". Beams at 8"x6". Rafters at Ø3.5" 11-Ga With Glide Elbows.	1	9,525.00	9,525.00T
CSSD	Custom Shade Design - Multi Dome Suspended Cantilever Shade in a Radius: 60' Length x 15' Width x 8' Entry Height. (2) Domes; Each Dome - 30' Length x 15' Width x 8' Entry Height. (3) Columns on Base Plates + 6" surfacing at 10"x10". Beams at 6"x6". Rafters at Ø3.5" 11-Ga With Glide Elbows.	2	22,369.50	44,739.00T
ENGDRAW	Engineered Drawings for Permitting	2	840.00	1,680.00
Shipping	Combined Shipping and Freight Charges	1	2,142.40	2,142.40

AGREED AND ACCEPTED:
If the above total price, scope of work, specifications, terms and conditions are acceptable, sign below indicating your acceptance and authorization for Pro Playgrounds to proceed with the work and/or sales transaction described in this quotation. Upon signature and payment in accordance with this quote, Pro Playgrounds will proceed with the work and/or sales transaction.

Signature _____ Name / Title _____ Date ___/___/___

Subtotal:	
Sales Tax: (6.5%)	
Total:	

Terms and Conditions - Price valid for 30 days and subject to change. 1. If installation is not included with your purchase, client will be responsible for coordinating, receiving and unloading of all goods, delivery drivers will not help unload goods. 2. Client will be responsible to inspect goods for defect, damage or missing parts, any deficiency or missing parts must be noted on delivery slip. 3. Client will be responsible for costs due to cancelled or missed delivery appointments. 4. Client has reviewed all items, colors and descriptions on this quote for accuracy and correctness. 5. If quote includes installation of goods, the installation is subject to the terms and conditions of Pro Playgrounds "Standard Installation Agreement" a copy of which may be obtained from your Sales Representative.

PRO PLAYGROUNDS
The Play & Recreation Experts

Pro Playgrounds
8490 Cabin Hill Road
Tallahassee, FL 32311

Quote

Date	Estimate #
4/4/2022	15008

Project Name
2022 Shades

Customer / Bill To	Ship To
Randal Park HOA Logan Smith 8730 Randal Park Blvd Orlando, FL 32832	Randal Park HOA Logan Smith 8730 Randal Park Blvd Orlando, FL 32832

WE WILL BEAT ANY PRICE BY 5%!

Item	Description	Qty	Cost	Total:
	RAW MATERIALS			
FBLOCK	Footer Blocks	32	3.75	120.00
RBAR5	No. 5 Rebar	910	1.25	1,137.50
RMC	Ready Mix Concrete 2500 PSI MIN	20	195.00	3,900.00
	PERMIT, RENTALS & LABOR			
ISPERMIT	PERMIT - STATE OF FLORIDA - COST NOT INCLUDED IN PRICE, COST SHALL BE $2000 OR 5% OF TOTAL PROJECT COST, WHICHEVER IS GREATER. PRICE DOES NOT INCLUDE COST OF ENGINEERING OR SEALED DRAWINGS.	1	2,000.00	2,000.00
TRSH	Fees for dumpsters, debris hauling or other trash/materials removal including spoils from ecavations.	4	725.00	2,900.00
PT	Portable Toilet	1	150.00	150.00T
22-CONPUMP	Concrete Pumping Services, Basic, 4 Hr	2.5	795.00	1,987.50
MINEXDAY	Mini Excavator Daily Rental	2	577.85	1,155.70
FLIFTDAY	Telescopic Fork Lift Daily Rental	2	1,308.10	2,616.20
LBR	Labor and Installation - New Shade Structures	1	27,000.00	27,000.00
DSC	Discount		-2,433.06	-2,433.06T
	NOTE Customer is responsible for removal of existing pergolas including footers prior to install.			

AGREED AND ACCEPTED:
If the above total price, scope of work, specifications, terms and conditions are acceptable, sign below indicating your acceptance and authorization for Pro Playgrounds to proceed with the work and/or sales transaction described in this quotation. Upon signature and payment in accordance with this quote, Pro Playgrounds will proceed with the work and/or sales transaction.

Signature _____ Name / Title _____ Date ___/___/___

Subtotal:	$98,620.24
Sales Tax: (6.5%)	$3,378.76
Total:	$101,999.00

Terms and Conditions - Price valid for 30 days and subject to change. 1. If installation is not included with your purchase, client will be responsible for coordinating, receiving and unloading of all goods, delivery drivers will not help unload goods. 2. Client will be responsible to inspect goods for defect, damage or missing parts, any deficiency or missing parts must be noted on delivery slip. 3. Client will be responsible for costs due to cancelled or missed delivery appointments. 4. Client has reviewed all items, colors and descriptions on this quote for accuracy and correctness. 5. If quote includes installation of goods, the installation is subject to the terms and conditions of Pro Playgrounds "Standard Installation Agreement" a copy of which may be obtained from your Sales Representative.

M.E.S.

M.E.S. PROFESSIONAL, INC.
10700 Fairhaven Way ~ Orlando, FL 32825
Phone 407-307-5592 ~ Email mesprofessional@hotmail.com

March 31, 2022

Via Email – apenagos@gmscfl.com

Ms. Alexandra Penagos
GMS
9145 Narcoossee Road
Suite A-206
Orlando, FL 32827

Re: Exterior Work – Removal of Two Pergolas at Randal Park, Orlando, FL

Dear Alex:

This is a proposal for the demolition and removal of the debris of the two (2) pergolas at the Club House's splash pad area at the above property.

Our cost to perform the above-mentioned preparation and scope of work, consisting of labor and materials, will be $3,200.00. Please let me know if you have any questions.

Very truly yours,

M.E.S. PROFESSIONAL, INC.

/s/ Enrique Sierra

Enrique Sierra

Work Authorization

The following is to obtain written authorization to perform the scope of services proposed above and provide terms and conditions for completion of those services and submittal of payment. Payment of services rendered will be based on the stated proposal above and made a part of this authorization. If M.E.S. is required to modify the scope of services, either by request or by our determination that additional services are required, we will provide you with a "Change Order" for the scope and cost revision.

Work authorized by:

By:_____
Name:_____
Title:_____
Date:_____

SECTION iii


39
There is no wire
in this area
Pool Lights?
8730 Randolph Park Blvd
This is a add-on area
8

Randal Park
Logan Smith
8730 Randal Park Blvd
Orlando, FL. 32832
706-329-4008

ILLUMINATIONS USA

Architectural and Landscape Lighting

Proposal

03/31/2022

"Let quality lighting enhance your living experience"

QTY	Description	Our Price	Total
	Lighting replacement for Park, Clubhouse and Pool area		
1	600 Watt Transformer Multi tap (10 year warranty)	328.02	328.02
21	Dauer integrated up light 10 watt 40 Deg 3000K 10 year limited warranty	94.25	1,979.25
16	Dauer integrated up light 6 watt 60 Deg 3000K 10 year limited warranty	88.56	1,416.96
10	Par 36- 8 watt (5 year warranty)	58.82	588.20
10	Brass PAR 36 Rockguard in-ground well light 10 Year Warranty	89.60	896.00
50	Miscellaneous Materials (greased cable wire nut)	2.00	100.00
1	Landscape plastic post	24.53	24.53
30	Low Voltage Commercial Grade Cable (for far left corner of pool area)	1.40	42.00
	Labor	2,000.00	2,000.00
	Total for lighting project $7,374.96		

We can not determine at this time if all cable is functioning, or if the cable voltage will hold a higher wattage fixture. This can only be determine during the install of the new lights. If the cable can not hold all the new lights we will use the old transformer at a closer location to the front lights to help off set the voltage. There must be a GFI near the front of property to be used for that transformer. ATTN: This proposal does not include time and/or materials that may be necessary to repair and/or replace pre-existing cable (not included in this proposal). In the event that any repair and/or replacement, (not included in this proposal) becomes necessary, a change order may be necessary.

CHANGE ORDER: ILLUMINATIONS USA or the Client may order changes in the Work or the timing or sequencing of the Work that impacts the Contract Price or the Contract Time. All such changes in the Work that affect Contract Time or Contract Price shall be formalized in a Change Order.

Payment terms: 1/3 down upon proposal acceptance, balance due on completion of install.
Please note: a convenience fee of 3% will be applied when using credit cards.

2204 Hempel Ave. Gotha, FL. 34734

407-341-1702

Dauer MANUFACTURING®

SPECIFICATION SHEET

Type:

Model:

2021 NEW PRODUCT RELEASE

MIRAGE Integrated LED Uplight Fixture

SPECIFICATIONS

VOLTAGE:
12V AC/DC.

HOUSING:
Cast aluminum with removable shroud.

FINISH:
Dark bronze powdercoat. Custom powder coated colors available.

LENS:
Tempered glass.

MOUNTING:
Threaded with 1/2” NPT. Heavy-duty composite stake included. May be mounted into threaded hubs in junction boxes or mounting accessories

WIRING:
Pre-wired with a five-foot pigtail of 18/2 cable.

WARRANTY:
Ten years.

The Mirage uplight features an integrated LED source available in 6 or 10 watts. 2700K or 3000K options. 25, 40 and 60-degree beam spreads.

DIMENSIONS:

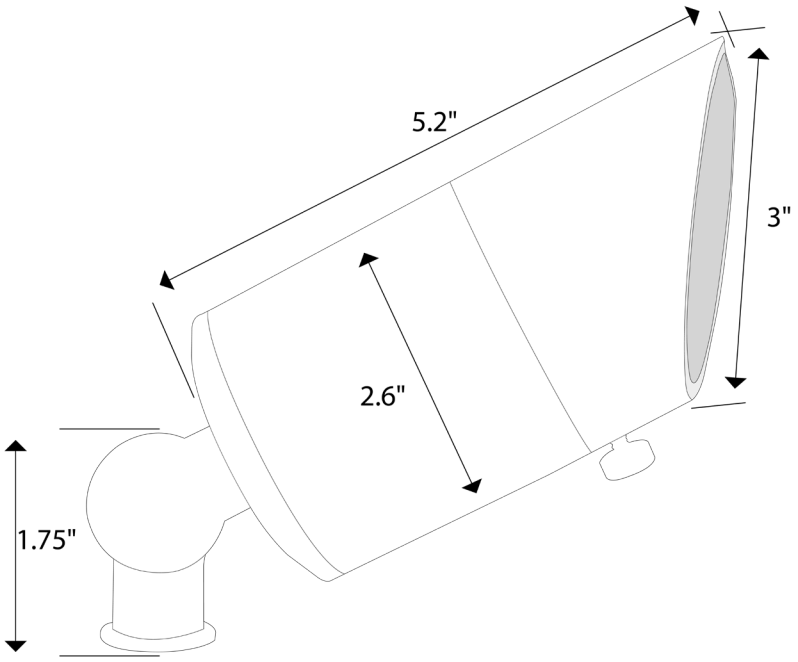

HQ: 10100 NW 116th Way, Suite 14 | Medley, FL 33178 • Plant: 1430 Gould Blvd., Suite 3, La Vergne, TN 37086
800.883.2590 DauerManufacturing.com

20 years strong

LED LAMP SPECIFICATIONS

LAMP TYPE:
Integrated LED.

OPTICS:
Integral optics providing available beam spreads from 25° to 60°.

COLOR TEMPERATURES:
Color temperature options provide the following qualities: 2700K or 5000K.

FIXTURE ORDERING INFORMATION
To order a lamped fixture with mounting options, select the appropriate choice from each column as in the following example:

EXAMPLE: 489801-MS

MODEL	WATTAGE	BEAM SPREAD	COLOR TEMP	LUMENS	EFFICACY	MOUNTING
489801 MIRAGE 6W 25° 2700K	6 W	25°	2700K	516	86 lm/W	**MS** Composite stake (incl.) 490034
489802 MIRAGE 6W 40° 2700K	6 W	40°	2700K	516	86 lm/W	
489803 MIRAGE 6W 60° 2700K	6 W	60°	2700K	516	86 lm/W	
489806 MIRAGE 6W 25° 3000K	6 W	25°	3000K	546	91 lm/W	
489807 MIRAGE 6W 40° 3000K	6 W	40°	3000K	546	91 lm/W	
489808 MIRAGE 6W 60° 3000K	6 W	60°	3000K	546	91 lm/W	
489811 MIRAGE 10W 25° 2700K	10 W	25°	2700K	780	78 lm/W	
489812 MIRAGE 10W 40° 2700K	10 W	40°	2700K	780	78 lm/W	
489813 MIRAGE 10W 60° 2700K	10 W	60°	2700K	780	78 lm/W	
489816 MIRAGE 10W 25° 3000K	10 W	25°	3000K	800	80 lm/W	
489817 MIRAGE 10W 40° 3000K	10 W	40°	3000K	800	80 lm/W	
489818 MIRAGE 10W 60° 3000K	10 W	60°	3000K	800	80 lm/W	
				900	90 lm/W	

LED LAMP SPECIFICATIONS

LAMP TYPE:
Integrated LED.

OPTICS:
Integral optics providing available beam spreads from 25° to 60°.

COLOR TEMPERATURES:
Color temperature options provide the following qualities: 2700K, 3000K or 5000K.

FIXTURE ORDERING INFORMATION
To order a lamped fixture with mounting options, select the appropriate choice from each column as in the following example:

EXAMPLE: 489801-MS

(Available Q1-2021)

MODEL	WATTAGE	BEAM SPREAD	COLOR TEMP	LUMENS	EFFICACY	MOUNTING
489851 MIRAGE 3W 25° 2700K Uplight	3 W	25°	2700K	294 lm	98 lm/W	**MS** Composite stake (incl.) 490034
489852 MIRAGE 3W 40° 2700K Uplight	3 W	40°	2700K	294 lm	98 lm/W	
489853 MIRAGE 3W 60° 2700K Uplight	3 W	60°	2700K	294 lm	98 lm/W	
489856 MIRAGE 3W 25° 3000K Uplight	3 W	25°	3000K	315 lm	105 lm/W	
489857 MIRAGE 3W 40° 3000K Uplight	3 W	40°	3000K	315 lm	105 lm/W	
489858 MIRAGE 3W 60° 3000K Uplight	3 W	60°	3000K	315 lm	105 lm/W	
489840 MIRAGE 10W 60° 5000K Uplight	10 W	60°	5000K	900 lm	90 lm/W	

12V In-Ground Brass Rock Guard Centennial Brass

15497CBR

SPECIFICATIONS

Certifications/Qualifications	
Prop65	Yes www.kichler.com/warranty
Dimensions	
Height	5.00"
Length	4.25"
Width	5.00"
Electrical	
Input Voltage	Single(120)V
Operating Voltage Range	12 VAC
Voltage	12V
Light Source	
Lamp Included	Not Included
Lamp Type	MR16
Light Source	Incandescent
Max or Nominal Watt	7.20
Mounting/Installation	
Location Rating	Wet

FIXTURE ATTRIBUTES

Housing	
Primary Material	BRASS
Product/Ordering Information	
SKU	15497CBR
Finish	Centennial Brass
UPC	783927540148

Finish Options

Centennial Brass

LDLIGHTING

ESTIMATE

407-419-1236
LDLightings.com
LDLightings@mail.com
Orlando, FL

Date: 3/14/2022 REV 3/17/22

Customer Sign:
Customer Print:
Project Location:

Description:

Description	Quantity	Unit Price	Cost
POOL AREA			
Labor - Crew			$ 2,295.00
Landscape Spot Lights Warm White 40°	49	$ 70.00	$ 3,430.00
Cabana aera Lights	5	$ 77.00	$ 385.00
Transformer *(IF REQUIRED - CAN POSSIBLY RE-USE ORIGINAL)* 600W Light Sensor	3	$ 295.00	$ 500.00
Waterproof Connectors (x2 per fixture)	88	$ 1.50	$ 132.00
Wiring Additional (per ft) (TEST + RE-USE EXISTING WIRING - ADDITION WIRE MIGHT BE REQUIRED)	150	$ 1.20	$ 180.00
Consumables (conduit, j-boxes, hardware)	1	$ 250.00	$ 250.00
Light Post	14	$ 55.00	$ 770.00
Main Photo-Cell Replace (Commercial)	1	$ 80.00	$ 80.00
PARK AREA			
Labor - Crew			$ 1,475.00
Landscape Spot Lights Warm White 40°	31	$ 70.00	$ 2,170.00
Transformer *(IF REQUIRED - CAN POSSIBLY RE-USE ORIGINAL)* 300W Light Sensor	2	$ 250.00	$ 500.00
Transformer *(IF REQUIRED - CAN POSSIBLY RE-USE ORIGINAL)* 600W Light Sensor	1	$ 295.00	$ 295.00
Waterproof Connectors (x2 per fixture)	62	$ 1.50	$ 93.00
Main Photo-Cell Replace (Commercial)	1	$ 80.00	$ 80.00
Light Post	10	$ 55.00	$ 550.00
Wiring Additional (per ft) (TEST + RE-USE EXISTING WIRING - ADDITION WIRE MIGHT BE REQUIRED)	150	$ 1.20	$ 180.00
Consumables (conduit, j-boxes, hardware)	1	$ 250.00	$ 250.00
		Commercial Discount	*$ 500.00*
		Total	$ 13,115.00

Security Deposit Required ***$3,280***

Payment Options:

Check - *Make payable to LD DESIGN LLC*
Zelle - *Send to LDLightings@mail.com*
Venmo - Send to @Liam-Deverson

Cashapp - Send to $LiamDeverson
PayPal - Send to LDLightings@mail.com
(PayPal Subject to a 3% Fee)

Terms and Conditions:

Estimate price is valid for 30 days.

365 day parts and labor warranty period with an $85 callout fee. (Call out fee subject to yearly inflation adjustment)

Payments: No work will be scheduled without a 25% down payment and agreement to the warranty / terms and conditions. Payments can be made by Check, Cash, Zelle, PayPal (subject to a 2.8% fee), Venmo, Cashapp, Apple Pay. The remaining balance will need to be paid upon project completion. Unless otherwise specified in writing, invoices not paid within 30 days of the invoice date will accrue interest at 12% per month. Plus 25% on the said account as attorney's fees and cost of collection in case suit. All change orders must be paid by the client and acknowledged by the client and installer including parts, labor and deposit.

Technology: LDDesign LLC is not liable for Wi-Fi connectivity issues, the client's local network should broadcast a separate 2.4G band ONLY. LDDesign's lighting system is not compatible with SOME multiple mesh network routers that only broadcast combined 2.4G & 5G bands. Any additional Wi-Fi connectivity diagnosis and repair is subject to additional parts and labor costs.

Warranty: Parts and Labor is subject to a 365-day limited warranty period, after which an $85 call out fee is charged. Warranty is nontransferable and does not cover the following: Vandalism, Settlement, Accidental Damage, Mowers, Weedwhackers, Misuse or Abuse, Structural Shrinkage, Lightning, Property Structure Distortion, Fire, Windstorm, Tornado, Earthquake, Hail, Hurricane, Windstorm, any other acts of God, Mold, Local Wi-Fi Connectivity Issues, Foreign Object Impact, Water and Ice Damage, Dissimilar Material Damage, Sun or UV Fading or Discoloring, Floods, Inadequate Gutter or Roof Drainage, Product Alteration Outside Intended use.

Randal Park
8730 Randal Park Blvd.
Orlando, Fl. 32832
% Logan Smith
Governmental Management Services
O: 407-841-5524
C: 706-329-4008
Lsmith@gmscfl.com

ORLANDO OUTDOOR LIGHTING

Proposal

03/28/2022

See your home in a whole new light!

Description: Office Front, Common area between Front and Pool, and Pool area.	Qty	Rate	Total
Utilize existing transformers, photocells and cable	0	0	0.00
Cable extensions	288’	1.67	480.96
Connectors	36	5.32	191.52
Concrete	12	16.76	201.12
Kichler 15497CBR Brass Well Light with 7W 3000K MR16 (10 Year Limited Warranty on the fixture and 5 Year Limited Warranty on the LED lamp)	36	169.99	6,119.64
Labor: Removal of old fixtures and installation of new			5,400.00
		Subtotal	**$12,393.24**
		% sales tax	**Federal Exemption**
		Total	**$12,393.24**

**** Orlando Outdoor Lighting, LLC. will consider meeting all competitive bids. ****

This proposal includes a 2 Year Workmanship Guarantee and handling of all Manufacturers Warranties free of charge.

ATTN: This proposal does not include time and/or materials that may be necessary to repair and/or replace pre-existing fixtures, (not included in this proposal). In the event that any repair and/or replacement, (not included in this proposal) becomes necessary, a change order may be necessary. CHANGE ORDER: Orlando Outdoor Lighting or the Client may order changes in the Work or the timing or sequencing of the Work that impacts the Contract Price or the Contract Time. All such changes in the work that affect Contract Time and/or Contract Price shall be formalized in a Change Order.

Orlando Outdoor Lighting, LLC.
201 Atherstone Ct. Longwood, Fl. 32779
407-789-7401
Don@OrlandoOutdoorLighting.cc

12V PAR36 Well Rock Guard Centennial Brass

15508CBR (Centennial Brass)

Project Name: _____
Location: _____
Type: _____
Qty: _____
Comments: _____

Certifications/Qualifications

Prop65	Yes
	www.kichler.com/warranty

Dimensions

Height	6.75"
Length	5.50"
Width	5.50"

Electrical

Input Voltage	Single(120)V

Primary Lamping

Lamp Included	Not Included
Lamp Type	PAR36
Light Source	Incadescent
# of Bulbs/LED Modules	1

Product/Ordering Information

SKU	15508CBR
Finish	Brass
UPC	783927540797

Specifications

Diffuser Description	Clear Tempered Soda Lime

Additional Finishes

Centennial Brass

Kichler
7711 East Pleasant Valley Road Cleveland, Ohio 44131-8010
Toll free: 866.558.5706 or kichler.com

Notes:
1) Information provided is subject to change without notice. All values are design or typical values when measured under laboratory conditions.
2) Incandescent Equivalent: The incandescent equivalent as presented is an approximate number and is for reference only.

KICHLER®

SECTION 4

RANDAL PARK

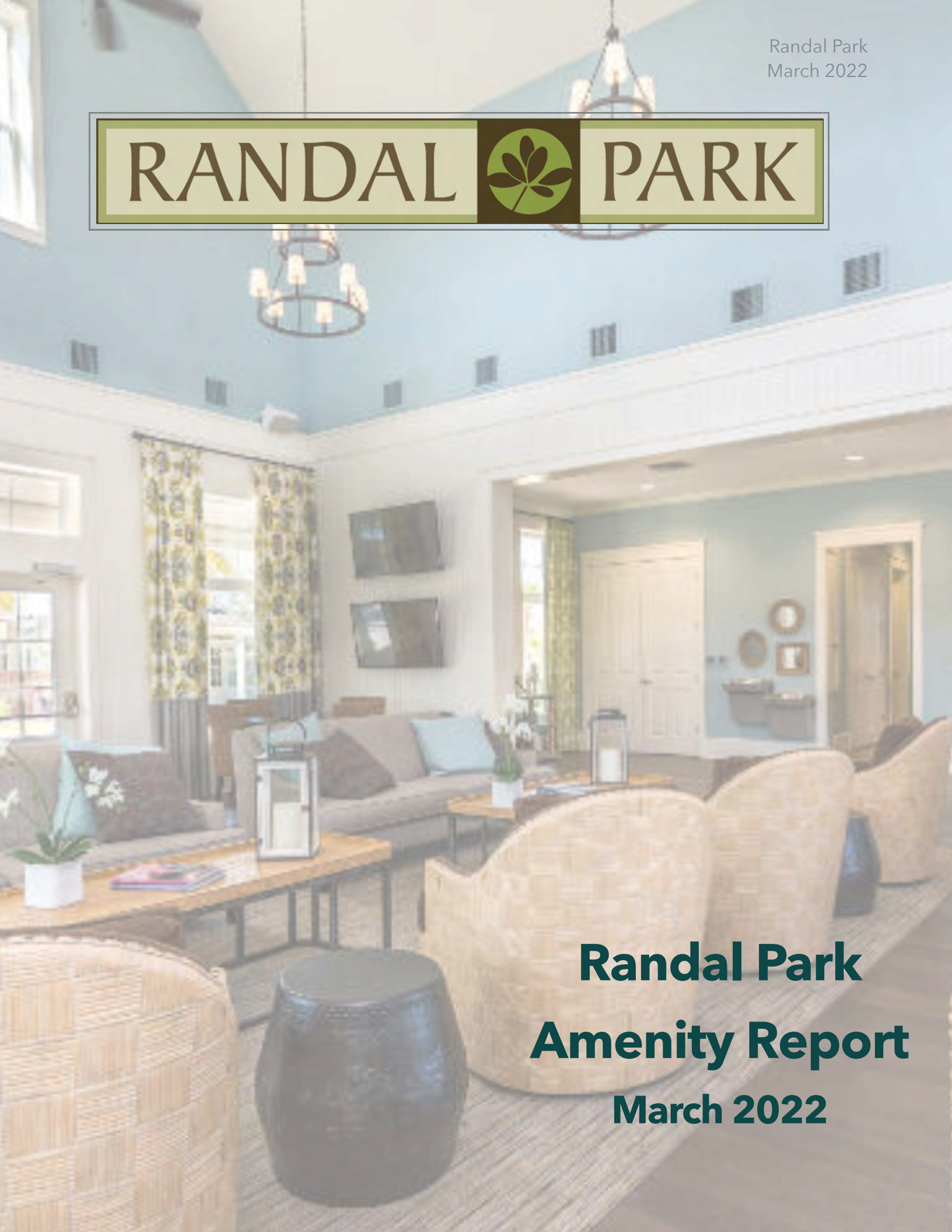

Randal Park Amenity Report

March 2022

FACILITY REPORT:

Pool, Gym and Randal House Clubhouse

- The BBQ areas are opened (9am - 8pm) Daily
- Gym (24/7)
- Pool (7am - 8pm) (7am - 9am lap swimmers only) Daily
- Randal House Clubhouse (10am - 6pm) Mon - Fri
- Onsite office staff is open from (9am - 5pm) Mon - Fri

March Randal House Rentals: 2

March Events:

* Food Truck Social:
    Jour De Crepe: 27 orders
    A Juicy Life: 19 orders
    Liberty Road BBQ: Canceled due to weather conditions
* Pizza Night:
    90+70= 160
* Chick fil-A:
    90 Orders
* Coffee Break:
    35 Orders

Events scheduled for April:

* Chick-fil-A Night: Tuesday, April 5
* Ladies Night -Thursday, April 7
* Pizza Night - Thursday, April 7 & 21
* Food Truck Social: Thursday, April 14
* Happy Hoppy Easter: April 16
* Coffee Break: Last Friday of the month, April 29

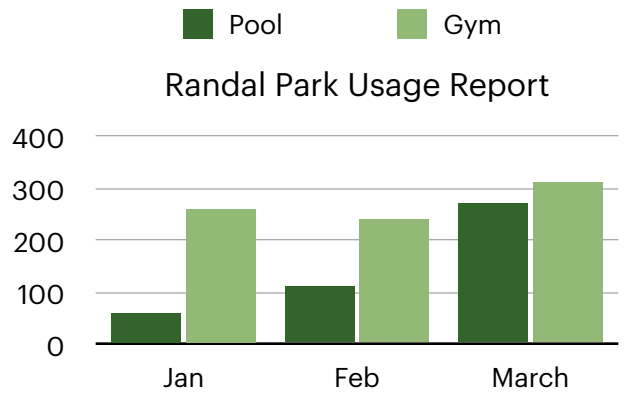

Randal House Clubhouse Repairs

Part of the roof was repaired on March 11, 2022.

Phase II - Repairs were made to the stone wall on March 7, 2022

Empty Nesters Brunch

Friday, March 4

10:30am-12:30pm

Attendance: 14 Residents

Storywalk

Saturday, March 5

10am - 4pm

When You Give a Moose a Muffin, and If You Give a Pig a Pancake.

A Storywalk consisted of roughly 20 large mounted pages that can be placed along a sidewalk, walking trail, or near a playground. Each page would be placed 6 feet apart and allow families to walk outside and read a story together.

The StoryWalk® Project was created by Anne Ferguson of Montpelier, VT and developed in collaboration with the Kellogg-Hubbard Library. Storywalk® is a registered service mark owned by Ms. Ferguson.

Chick-fil-A Night

Chil-fil-A was onsite on Tuesday, March 8 starting at 5:00pm. They were sold out of sandwiches and nuggets by 6:45pm.

We look forward to another successful event.

Randal Park Skinny Hour

Friday, March 15, 6pm -8pm.

Attendance : 4 Residents

A fun way to learn calorie count and healthy life style by choosing alternative ingredients with alcoholic beverages and food.

Ice cream Social

Crooked Cow homemade Ice cream

Saturday, March 19, 1pm - 3pm.

total of 150 tickets were sold

SECTION 5

2022 SPECIAL DISTRICTS QUALIFYING PROCEDURE

Qualifying Period – Noon, June 13, 2022 to Noon, June 17, 2022

(Dates are subject to change)

Special District Candidates who WILL NOT incur election expenses or contributions will do the following:

1. Present the items listed below during the qualifying period

    - Form 1 – Statement of Financial Interest
    - Form DS-DE 302NP Candidate Oath – Nonpartisan Office
    - Qualifying fee of $25.00 or
    - 25 valid petitions.

Special District Candidates who WILL incur election expenses or contributions must do the following:

1. File DS-DE9 Appointment of Campaign Treasurer/Designation of Campaign Depository (open campaign account). This must be completed **prior** to accepting campaign contributions and making campaign expenditures, (section 99.061(3), F.S.).

2. Read Chapter 106 of the Florida Statutes, and submit a DS-DE84 Statement of Candidate.

3. File required campaign treasurer's reports

4. Present qualifying documents during the qualifying period.

    - Form 1 – Statement of Financial Interest
    - Form DS-DE 302NP Candidate Oath – Nonpartisan Office
    - Qualifying fee of $25.00 or
    - 25 valid petitions

Candidates Paying the Qualifying Fee:

All special district candidates, except a person certified to qualify by the petition method or seeking to qualify as a write-in candidate, must pay the qualifying fee of $25.00.

The qualifying fee for a special district candidate is not required to be drawn upon the candidate's campaign account.

Candidates Qualifying by Petition Method:

Special district candidates need to 25 valid signatures of qualified electors within the district. There is a fee of 10 cents per petition to be paid to the Supervisor of Elections for the cost of verifying the signature. The fee must be paid at the time the petitions are submitted.

The deadline for submitting candidate petitions is **noon, May 16, 2022**.

Special district candidates are not required to file Form DS-DE 9 prior to collecting signatures.

See Section 99.061(3), Florida Statutes.